UNISORB®
INSTALLATION TECHNOLOGIES

DATA SHEET

VIBRALASTIC™ TYPE VB MOUNTS

Bulletin No.
GB-0158-1.1
3/10/11

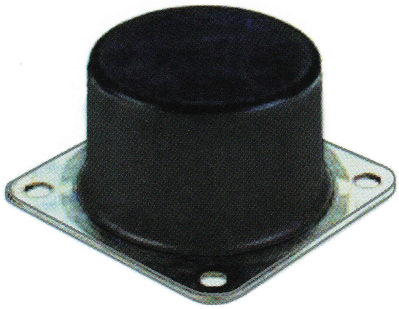

Vibralastic Type VB Bumper

This product is used to safely and effectively limit movement of equipment components.

Typical applications could include:

- Working beams
- Falling objects
- Forestry vehicles
- Material handling equipment
- Traversing cranes
- Cabinets
- Wagons
- Lifting cranes

Features:
Bumper consists of a cylindrical rubber body which is bonded to a square shaped steel baseplate. All four corners of the baseplate contain a mounting hole.

A special high memory rubber is used to assure as much energy absorption as possible. The volume of the rubber is used at optimum efficiency.

For new equipment designs simpler and lighter calculated forces can be considered, thus achieving a lower cost installation.

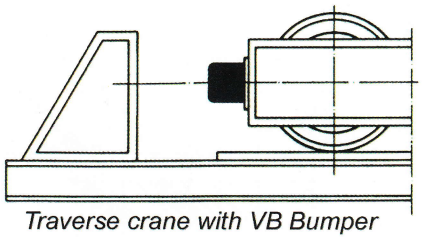

Traverse crane with VB Bumper

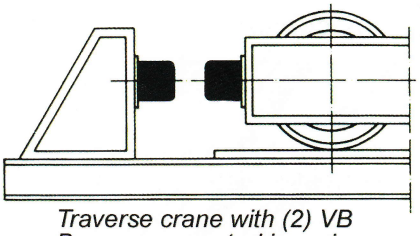

Traverse crane with (2) VB Bumpers mounted in series

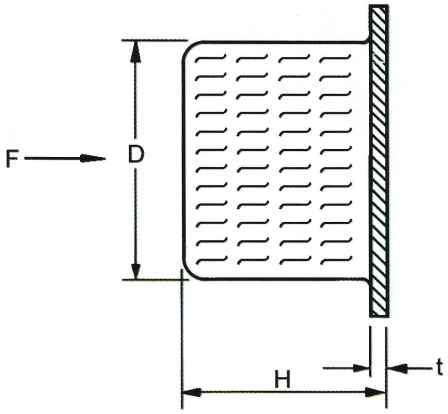

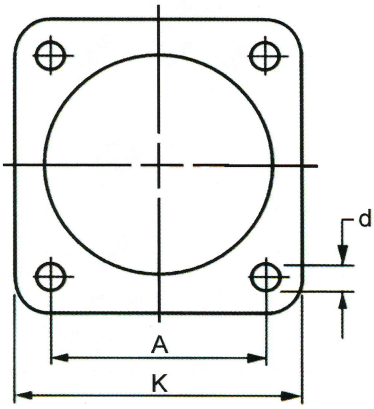

TYPE	A	D	d	H	K	t	WEIGHT	F MAX. (N)
VB 50	50	50	7	43	70	3	0.2	8000
VB 75	80	80	9*	68	100	5	0.9	20000
VB 100	100	100	9	86	125	6	1.3	41000
VB 200	200	200	13	168	250	8	10.0	180000

*Dimensions are in millimeters. Weights are in kilograms. *Hole may be enlarged to 11mm diameter if required.*

VIBRALASTIC™ TYPE VB MOUNTS

APPLICATION FORMULAS

$$E = \frac{m \cdot v^2}{2} \quad (1)$$

$$E = F \cdot s \quad (2)$$

$$F = m \cdot a \quad (3)$$

$$s = \frac{a \cdot t^2}{2} \quad (4)$$

$$v = \sqrt{a \cdot t} \quad (5)$$

$$v = \sqrt{2 \cdot a \cdot s} \quad (6)$$

$$v = \sqrt{2 \cdot g \cdot h} \quad (7)$$ applicable in free fall

Equations (4) thru (7) are applicable for initial velocity = 0

E = energy in Nm
m = mass in kilograms
v = velocity in meters/second (m/s)
F = force in Newtons
s = distance in meters
a = acceleration in m/s²
t = time in seconds
g = acceleration due to gravity 9.81 m/s²
h = height in meters
d = spring travel in meters

Mp = mega pascals
kN = kilo newtons
Kpm = kilo pascal meters
Nm = newton meters
mm = millimeters

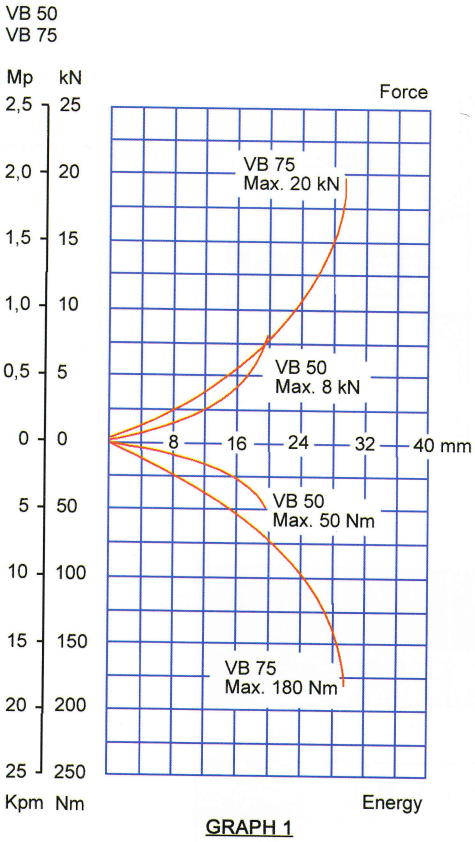

GRAPH 1

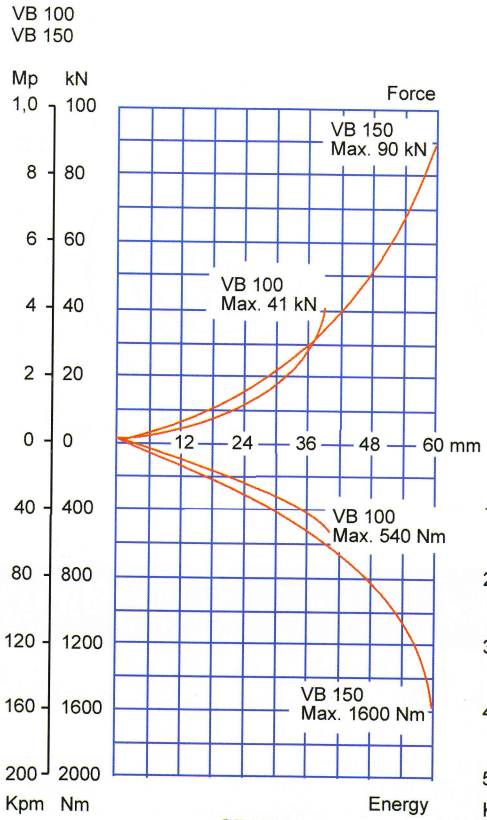

GRAPH 2

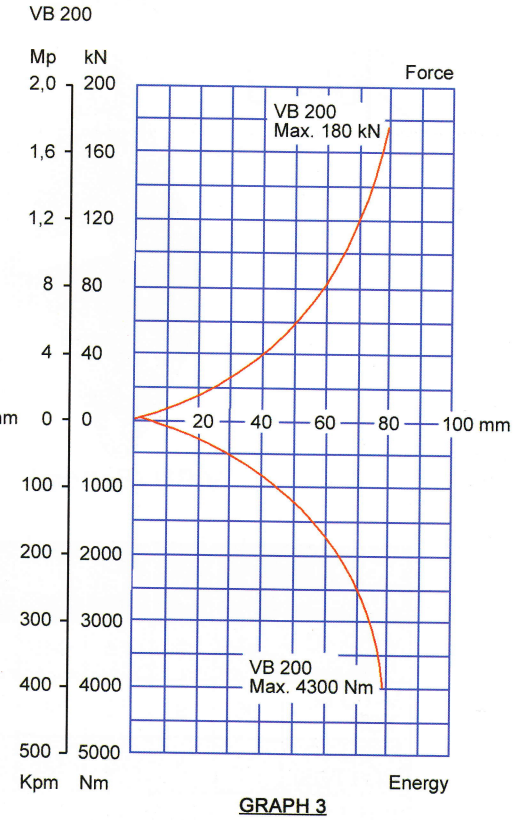

GRAPH 3

UNISORB®
INSTALLATION TECHNOLOGIES
www.unisorb.com
BOX 1000, JACKSON, MI 49204-1000
888-4-UNISORB • FAX 517-764-5607
ISO-9001:2000 Certified