UNISORB®

INSTALLATION TECHNOLOGIES

UNISORB FIXATOR® SYSTEMS

COMPREHENSIVE APPLICATION & SPECIFICATION GUIDELINES

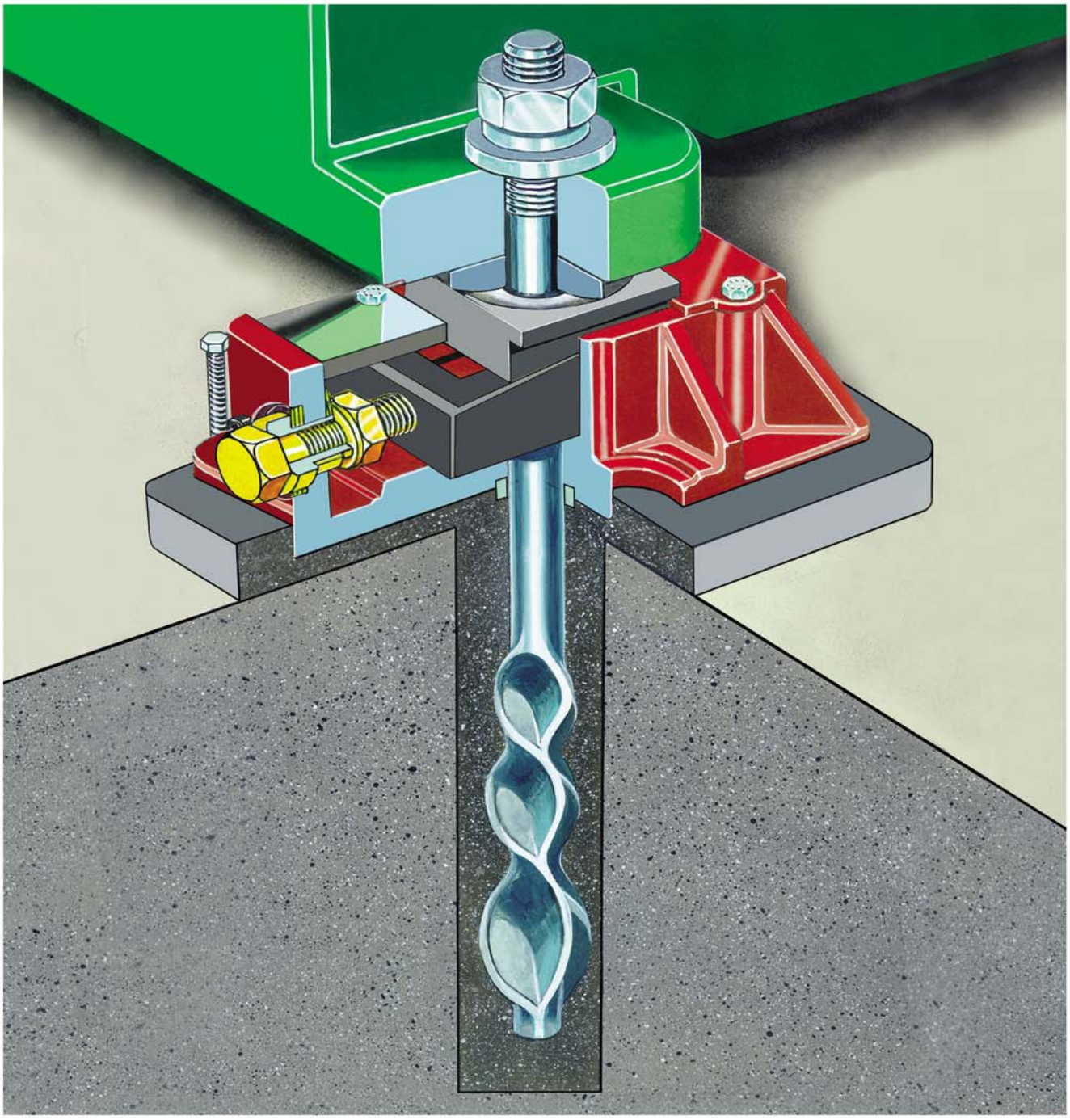

ISO-9001 Certified

INTRODUCTION & TABLE OF CONTENTS

INTRODUCTION

This UNISORB® FIXATOR® publication presents detailed performance and product selection data covering the FIXATOR® models and sizes available for precision alignment of support critical machinery. Among the Data included are detailed specifications, pictorial representations of available optional accessories, installation instructions and standard drawings illustrating various FIXATOR® application configurations. It is our intent to provide you with sufficient information for you to have a complete understanding of the particular FIXATOR® SYSTEM recommended by UNISORB®'s Engineers.

UNISORB® FIXATOR® SYSTEMS have been carefully designed to provide optimum performance and ease of installation, even in the most demanding of circumstances.

The UNISORB® engineering staff and field representatives are readily available to provide design and on-site assistance with your projects to assure that maximum product performance is achieved.

The applications and specifications presented herein are typical. For specific applications contact Unisorb Engineering and Sales at 1-888-4-UNISORB or FAX 517-764-5607.

NOTE: All Fixator information in this catalog pertains to machine tool applications. Call UNISORB about the use of Fixators for Power Generation equipment.

UNISORB® is a registered trade name of UNISORB® Installation Technologies. Other registered trade names and trademarks in this catalog include:

FIXATOR®
V-1®
V-100®

© COPYRIGHT UNISORB® 2011 (10/11)

TABLE OF CONTENTS

RK FIXATOR® SYSTEM

1 RK FIXATOR® Applications
2 RK FIXATOR® Technical Specifications (English)
3 RK FIXATOR® Technical Specifications (Metric)
4 RK FIXATOR® Options
5-18 RK FIXATOR® Option Specifications (English & Metric)
19-21 RK FIXATOR® Installation Instructions
22-35 RK FIXATOR® Standard Installation Drawings
36 RK FIXATOR® Grout Chart

MS FIXATOR® SYSTEM

37 MS FIXATOR® Description
38 MS FIXATOR® Dimensions

S FIXATOR® SYSTEM

39 S FIXATOR® Description
40 S FIXATOR® Dimensions
41 S FIXATOR® Technical Specificatons
42 S FIXATOR® Options
43 S FIXATOR® Detailed Option Specifications Non-Anchored Installation
44-45 S FIXATOR® Detailed Option Specifications Anchored Installation
46 S FIXATOR® Installation Instructions

GENERAL INFORMATION

47 UNISORB® Grout Forms
48 Proper Grouting Procedures
49 The World of Unisorb

RK FIXATOR® SYSTEM

RK FIXATOR® APPLICATIONS

In any machinery installation, the question must be asked "is this machine support critical?" In other words, does it require support from its foundation to maintain critical alignments between machine elements? A few examples of machines that typically fall within this category are long bed lathes (over 48" or 122mm), long bed grinders (over 48" or 122mm), large horizontal boring mills, etc. Some helpful criteria may include any machine with rapid changes in load caused by motion of any element, machines which are equipped with leveling devices by the builder, most machines working with parts over 50 lbs. or 23kg. in weight, and any machine whose installation instructions call for alignment at installation.

The UNISORB® RK FIXATOR® SYSTEM is the finest anchoring/alignment product in the world. It makes support critical machinery installations fast and simple. Each application is engineered by UNISORB®'s Engineers to assure successful implementation and results.

Not only are anchoring/alignment installations fast and easy, but realignments can be achieved without loosening the anchor nut, and can be done whenever necessary. Unlike conventional leveling methods that require repeated trial and error jacking and tightening during machine installation, the RK FIXATOR® SYSTEM permits alignment adjustments to be made after anchor nuts are tight. The only tool required to adjust the FIXATOR® is a small hand wrench.

The patented RK FIXATOR® SYSTEM levels and aligns machinerv to tenths (.0001" or .0025mm) tolerances. Finely machined Molykoted surfaces, limited backlash and high mechanical advantage make it possible to vary height adjustments at any time, even under maximum loads. The time consuming work and production losses usually associated with aligning are eliminated. Machines remain in service, and machine life is prolonged.

Other important benefits include built-in compensation for uneven areas in foundations or machine bases, and true vertical lift (made possible by a 3-piece wedge design) to eliminate lateral forces as machines are raised or lowered. The RK FIXATOR® SYSTEM also affords the most rigid machine-to-foundation connection available. RK FIXATOR® SYSTEMS are available in six sizes with a wide choice of optional equipment that adapt the system to meet any installation required.

The RK FIXATOR® Basic Units are rustproofed at manufacture and require no further treatment for normal machine tool applications. All load-bearing surfaces are Molykoted at manufacture and require no further attention during the life of the unit. Under normal circumstances, the adjusting bolt should move easily under any loading, requiring only the use of a small hand wrench. The anchor bolts supplied with the FIXATORS® are of special design to allow stretching with no reduction in strength or anchoring power.

The above listed advantages of the UNISORB® RK FIXATOR® SYSTEM have been consistently found to outweigh any additional expense necessary to purchase the units.

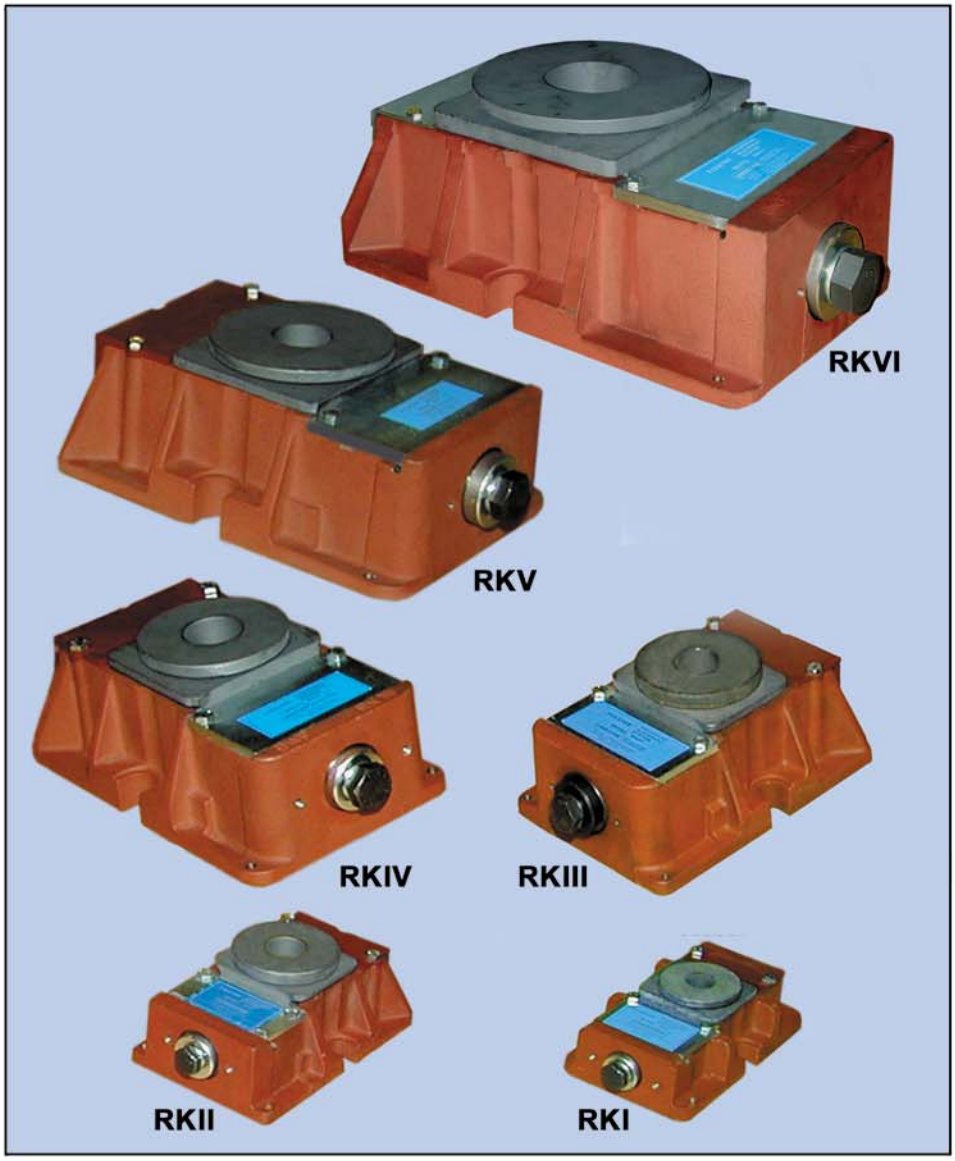

RK FIXATOR® TECHNICAL SPECIFICATIONS

DESCRIPTION	Dim.	RKI	RKII	RKIII	RKIV	RKV	RKVI
Recommended machine dead weight	lbs.	2,200	4,400	8,900	13,400	26,900	44,900
Maximum allowable lifting load per FIXATOR®	lbs.	20,000	26,500	53,500	80,500	157,000	224,500
Spring constant	lb./in.	11,420,000	25,695,000	45,681,000	57,101,000	79,942,000	102,782,000
Vertical adjustment per revolution of height adjusting screw	in.	0.010	0.010	0.012	0.014	0.017	0.020
Maximum vertical adjustment	in.	0.20	0.20	0.24	0.32	0.40	0.51
Approximate torque required to turn adjusting screw	ft. lb./1000 lbs. load	1.0	1.0	1.3	1.5	1.8	2.3
Maximum allowable torque on adjusting screw	ft. lb.	20	27	71	118	284	516
Thread dimensions	M x S metric	16 x 2 mm	20 x 2.5 mm	24 x 3 mm	30 x 3.5 mm	36 x 4 mm	48 x 5mm
Approximate torque on anchor bolt nut at yield point of bolt	ft. lb.	103	199	332	664	1,180	2,729
Approximate tension on anchor bolt at yield point	lbs.	11,900	18,200	25,800	40,900	59,500	105,600
Weight of Basic Unit	lbs.	8.8	12.1	25.3	46.2	92.4	154.3

DIMENSIONS*																					
SIZE RK	M	L	B	H**	DØ	SW	EØ	d	c	z	h	l	b	e_1	e_2	k	x	Y	f_1Ø	f_2Ø
I	M12	6.89	4.13	2.17	2.36	19 mm	.80	.63	.83	.51	.20	3.62	3.54	.55	1.02	.47	3.27	7.52	.67	.75
II	M20	7.01	4.72	2.95	2.95	19 mm	1.00	.59	1.22	.59	.20	3.78	3.94	.55	1.02	.51	3.23	7.60	.83	.98
III	M24	8.66	5.91	3.74	3.54	24 mm	1.25	.87	1.57	.67	.24	4.65	5.12	.71	1.26	.87	4.01	9.53	.98	1.22
IV	M30	10.83	7.09	4.53	4.33	30 mm	1.55	1.34	1.93	.67	.31	5.59	6.30	.94	1.50	.94	5.24	12.17	1.22	1.46
V	M36	13.58	9.06	5.31	5.91	36 mm	1.80	1.34	2.28	.79	.39	7.09	8.07	1.10	1.81	1.34	6.49	14.92	1.46	1.73
VI ***	M36	16.54	10.63	6.50	7.87	46mm	3.15	1.18	2.55	1.26	.51	9.06	9.61	1.06	1.75	1.18	7.48	17.72	2.56	—

*CASTING DIMENSIONS MAY VARY ** HEIGHT WITH MACHINE BASE (OPTION b), FOR STANDARD CASTING ADD 0.08" (APPROX.)
***FOR OPTION DETAILS FOR RKVI CONTACT UNISORB ENGINEERING.

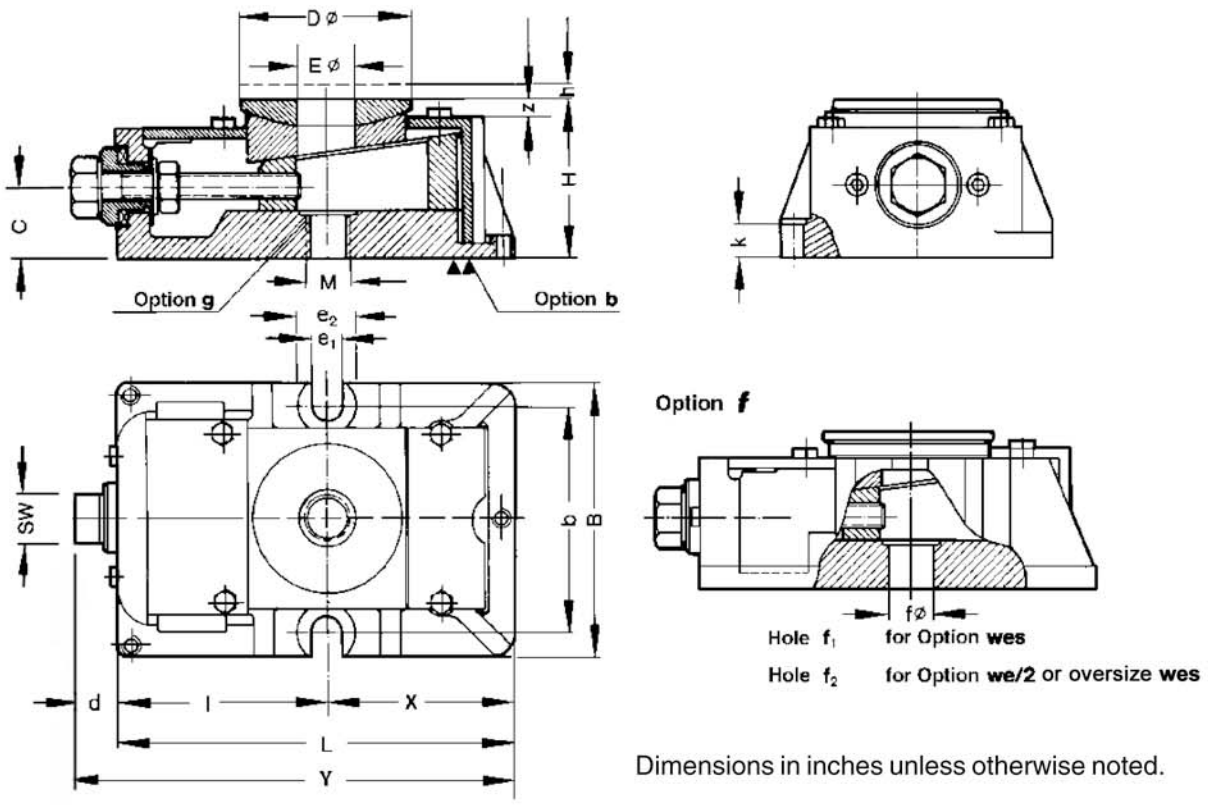

Dimensions in inches unless otherwise noted.

RK FIXATOR® TECHNICAL SPECIFICATIONS

DESCRIPTION	Dim.	RKI	RKII	RKIII	RKIV	RKV	RKVI
Recommended machine dead weight	N	10,000	20,000	40,000	60,000	120,000	200,000
Maximum allowable lifting load per FIXATOR®	N	90,000	120,000	240,000	360,000	700,000	1,000,000
Spring constant	N/µm	2,000	4,500	8,000	10,000	14,000	18,000
Vertical adjustment per revolution of height adjusting screw	mm	0.25	0.25	0.29	0.35	0.43	0.51
Maximum vertical adjustment	mm	5	5	6	8	10	13
Approximate torque required to turn adjusting screw	N·m/10^3kg	3	3	4	4.5	M36 5.5 M42 6	7
Maximum allowable torque on adjusting screw	N·m	27	36	96	160	388	697
Thread dimensions	M x S metric	16 x 2 mm	20 x 2.5 mm	24 x 3 mm	30 x 3.5 mm	36 x 4mm 42 x 4.5mm	48 x 5mm
Approximate torque on anchor bolt nut at yield point of bolt	N·m	140	270	450	900	M36 1,600 M42 2,700	3,700
Approximate tension on anchor bolt at yield point	N	53,000	81,000	115,000	182,000	M36 265,000 M42 385,000	469,900
Weight of Basic Unit	kg	4	5.5	11.5	21	42	70.1

DIMENSIONS*																				
SIZE RK	M	L	B	H**	DØ	SW	EØ	d	c	z	h	l	b	e_1	e_2	k	x	Y	f_1Ø	f_2Ø
I	M12	175	105	55	60	19 mm	20	16	21	13	5	92	90	14	26	12	83	191	17	19
II	M20	178	120	75	75	19 mm	25	15	31	15	5	96	100	14	26	13	82	193	21	25
III	M24	220	150	95	90	24 mm	32	22	40	17	6	118	130	18	32	22	102	242	25	31
IV	M30	275	180	115	110	30 mm	39	34	49	17	8	142	160	24	38	24	133	309	31	37
V	M36	345	230	135	150	36 mm	46	34	58	20	10	180	205	28	46	34	165	379	37	44
VI ***	M36	420	270	165	221	46mm	80	27	65	32	13	230	244	27	44	30	190	450	44	—

*CASTING DIMENSIONS MAY VARY ** HEIGHT WITH MACHINE BASE (OPTION b), FOR STANDARD CASTING ADD 2mm (APPROX.)
***FOR OPTION DETAILS FOR RKVI CONTACT UNISORB ENGINEERING.

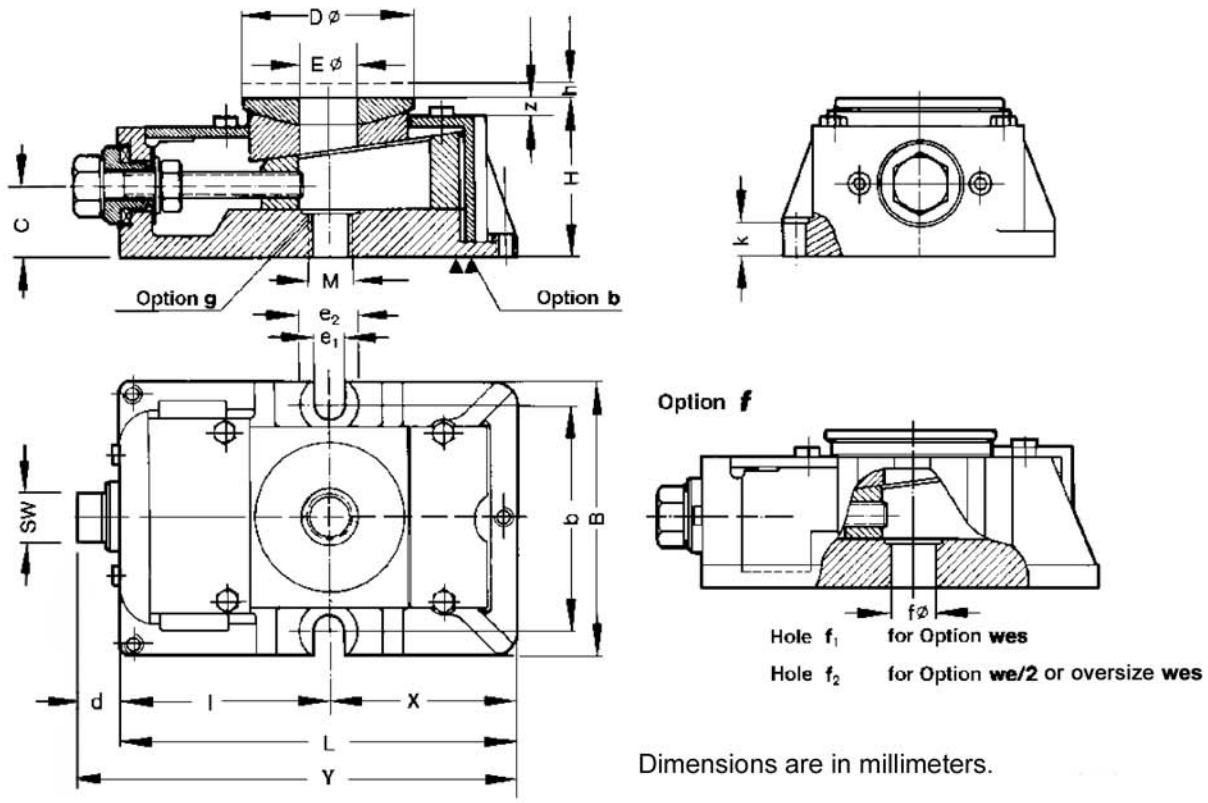

Dimensions are in millimeters.

RK FIXATOR® OPTIONS

FIXATOR® OPTIONS			
	Basic Unit	Basic Unit with Spherical Seat including Option **g** (internal threads for Option **ste**)	
	Option **b**	**Machined Base**	For attachment to floor plates or other machined surfaces
	Option **c**	**Side Anchor Bolts** for connecting FIXATOR® to Foundation	For use with Option **ste** and **ste/2**
	Option **ste**	**Normal or Long Center Hold Down Stud** for attaching the FIXATOR® to the machine	Connection between FIXATOR® and machine is made by a high tensile stud screw
	Option **ste/2**	**Two-Piece Center Hold Down Stud** for attaching the FIXATOR® to the machine	Connection between FIXATOR® and machine by high tensile stud screw (two pieces) where there are access problems
	Option **wes** Option **we/2**	**Through Type Anchor/Hold Down Stud** for the direct connection of the machine to the foundation **Two-Piece Anchor/Hold Down Stud** for the direct connection of the machine to the foundation	Used in place of Options **c** and **ste**
	Option **f**	**Housing Clearance Hole** for Option **wes**	Required when Option **wes** is specified
	Option **mon**	**Locking System** for the top spherical washer	Used for set-up tooling
	Option **p**	**Spherical Washer Set** for non-parallel bearing surfaces	Corrects for angular misalignment to prevent line contact
	Option **r**	**Oversized Spherical Washer Set** for non-parallel bearing surfaces	Provides greater bearing area when machine base opening is excessively large
	Option **d**	**Lateral Adjuster** for adjusting machine location	For lateral adjustment of the machine. Requires side anchor bolts unless FIXATOR® embedded to resist imposed forces
	Option **le**	**Adjustment Extension** for adjusting FIXATORS® which are located in hard to reach places under machines	The height adjustment is done via an extension shaft from beyond the rim of the machine
	Option **les**	**Enclosed Adjustment Extension** for adjusting FIXATORS® which are located in hard to reach places under machines	Facilitates height adjustment via an extension shaft from beyond the rim of the machine when FIXATOR® is embedded in foundation
	Option **m**	**Adjustment Bolt Enclosure** for use with recessed FIXATORS®	Permits adjustment when FIXATOR® is embedded in foundation

RK FIXATOR® OPTION SPECIFICATIONS

wes

Through Type Anchor/Hold Down Stud for the direct connection of the machine to the foundation.

Note:
Specify "f_1" (Basic Model Option) in your order.

Sizes II, III and IV permit the use of the next size larger anchor bolt to improve safety under extremely high tensile loads. When selecting the anchor, however, the maximum allowable load must never be exceeded.

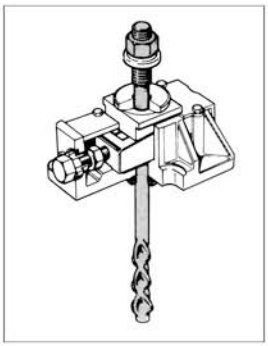

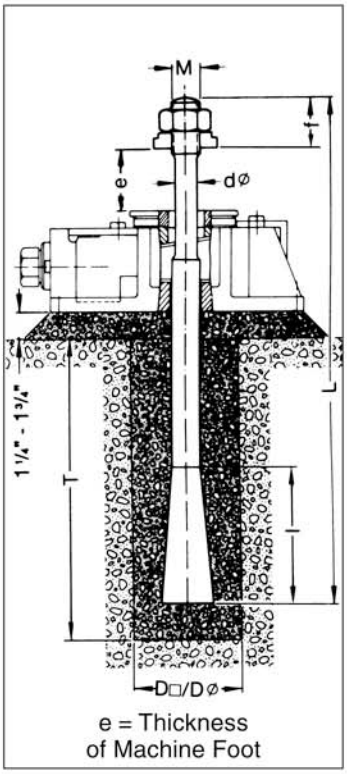

DIMENSIONS										
SIZE RK	M	L	l	f	dØ	e from	e to	Foundations D	Foundations T	Approx. Clamping Force lbs.
I	M16	12.99	3.54	1.18	.51	.79	2.36	3.00	9.00	11,900
II	M20	15.75	4.33	1.57	.63	.79	3.54	3.50	10.75	18,200
III	M24	19.69	5.12	1.97	.75	1.18	3.94	4.00	13.50	25,800
IV	M30	23.62	5.91	2.17	.94	1.38	5.31	5.00	16.25	40,900
V	M36	31.50	7.09	2.56	1.14	1.57	5.91	6.00	22.50	59,500
	M42	39.37	10.24	2.95	1.38	1.57	7.87	7.00	30.00	86,500

Note: Hole sizes and grout dam heights based on using UNISORB® V-1® Grout.

we/2

Two-Piece Anchor/Hold Down Stud for the direct connection of the machine to the foundation.

Note:
Specify "f_2" (Basic Model Option) and dimension "e" (thickness of machine foot) in your order.

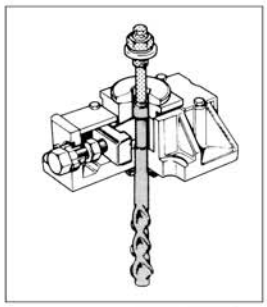

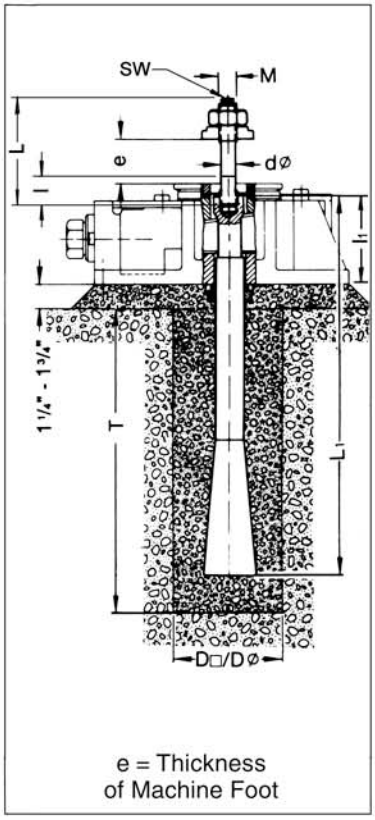

DIMENSIONS												
SIZE RK	M	L_1	dØ	SW	Short we/2 L	Short we/2 l	e dim. from	e dim. to	Long we/2 L	Long we/2 l	e dim. from	e dim. to
I	M16	7.48	.51	10mm	5.12	2.17	.79	2.17	6.10	2.36	2.36	3.15
II	M20	10.83	.63	13mm	5.51	1.97	.79	1.97	7.48	3.15	2.17	3.94
III	M24	14.17	.75	17mm	6.50	2.36	1.18	2.36	8.86	3.54	2.56	4.72
IV	M30	17.72	.94	19mm	7.48	2.76	1.38	2.76	10.04	4.33	2.95	5.31
V	M36	23.62	1.14	24mm	8.66	3.15	1.57	3.15	10.83	4.72	3.35	5.31

Foundations D	Foundations T	Approx. Clamping Force lbs.
3.50	9.00	11,900
4.00	10.75	18,200
5.00	13.50	25,800
6.00	16.25	40,900
7.00	22.50	59,500

Note: Hole sizes and grout dam heights based on using UNISORB® V-1® Grout.

RK FIXATOR® OPTION SPECIFICATIONS

wes

Through Type Anchor/Hold Down Stud for the direct connection of the machine to the foundation.

Note:
Specify "f_1" (Basic Model Option) in your order.

Sizes II, III and IV permit the use of the next size larger anchor bolt to improve safety under extremely high tensile loads. When selecting the anchor, however, the maximum allowable load must never be exceeded.

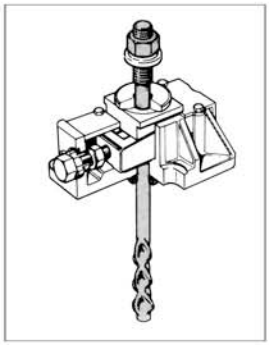

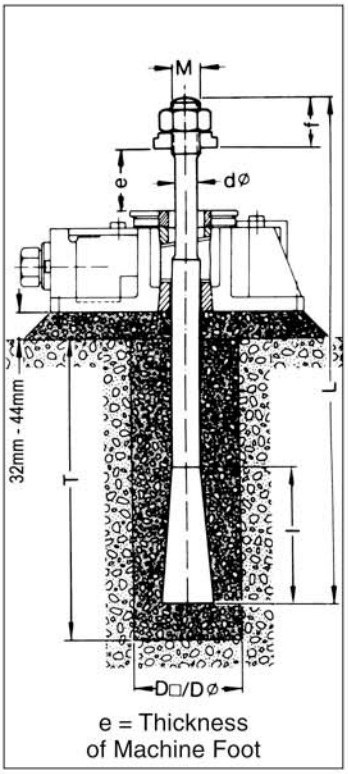

DIMENSIONS										
SIZE RK	M	L	l	f	dØ	e from	e to	Foundations D	Foundations T	Approx. Clamping Force N Max.
I	M16	330	90	30	13	20	60	70	230	53,000
II	M20	400	100	40	16	20	90	80	270	81,000
III	M24	500	135	50	19	30	100	100	340	115,000
IV	M30	600	150	55	24	35	135	120	410	182,000
V	M36	800	180	65	29	40	150	150	570	265,000
	M42	1000	260	75	35	40	200	170	760	385,000

Note: Hole sizes and grout dam heights based on using UNISORB® V-1® Grout.

we/2

Two-Piece Anchor/Hold Down Stud for the direct connection of the machine to the foundation.

Note:
Specify "f_2" (Basic Model Option) and dimension "e" (thickness of machine foot) in your order.

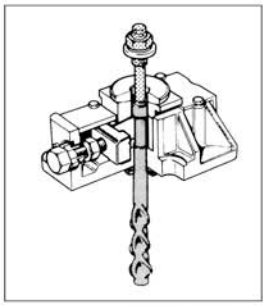

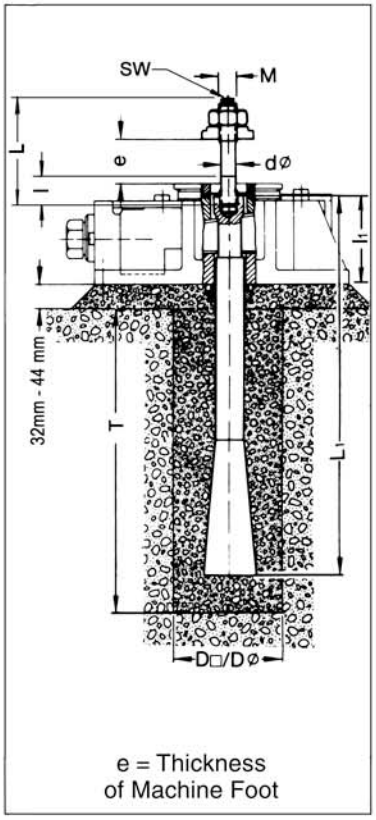

DIMENSIONS												
SIZE RK	M	L_1	dØ	SW	Short we/2 L	Short we/2 l	e dim. from	e dim. to	Long we/2 L	Long we/2 l	e dim. from	e dim. to
I	M16	190	13	10mm	130	55	20	55	155	60	60	80
II	M20	275	16	13mm	140	50	20	50	190	80	55	100
III	M24	360	19	17mm	165	60	30	60	225	90	65	120
IV	M30	450	24	19mm	190	70	35	70	255	110	75	135
V	M36	600	29	24mm	220	80	40	80	275	120	85	135

Foundations D	Foundations T	Approx. Clamping Force N Max.
80	150	53,000
100	220	81,000
120	290	115,000
150	360	182,000
170	500	265,000

Note: Hole sizes and grout dam heights based on using UNISORB® V-1® Grout.

RK FIXATOR® OPTION SPECIFICATIONS

p

Spherical Washer Set for non-parallel bearing surfaces.

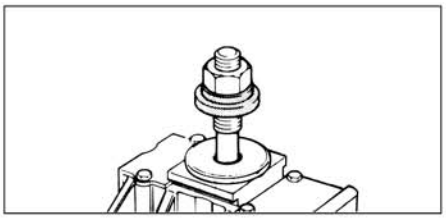

DIMENSIONS				
SIZE RK	DØ	H	dØ	bØ
I (M12)	1.57	.35	1.18	.51
I (M16)	1.57	.35	1.18	.67
II	1.73	.39	1.42	.83
III	2.20	.51	1.73	.98
IV	2.68	.63	2.20	1.22
V M36	3.07	.79	2.68	1.46
V M42	3.94	1.02	3.54	1.73

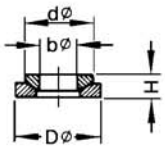

Max. 10° Angle Correction

r

Oversized Spherical Washer Set for non-parallel bearing surfaces.

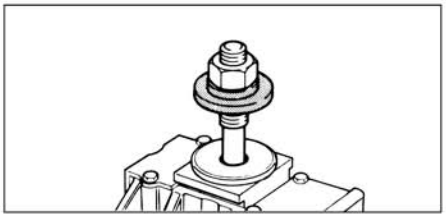

DIMENSIONS				
SIZE RK	DØ	H	dØ	bØ
I	1.73	.39	1.42	.67
II	2.20	.51	1.73	.83
III	2.68	.63	2.20	.98
IV	3.15	.63	2.20	1.22
V M36	3.94	.79	2.68	1.46
V M42	4.92	1.02	3.54	1.73

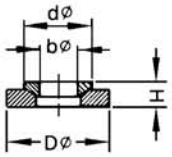

Max. 10° Angle Correction

z

Foam Centering Bushing for the concentric location of the anchor bolts in the machine foot holes.

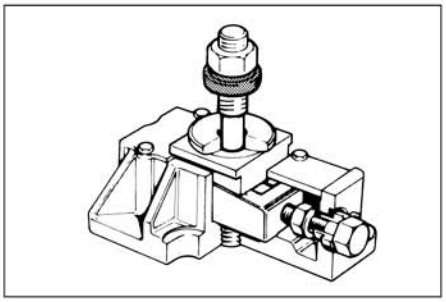

DIMENSIONS			
SIZE RK	fØ	DØ	H
I	.62	1.25	1.00
II	.81	1.56	1.00
III	.96	1.75	1.00
IV	1.19	2.13	1.00
V M36	1.44	2.38	1.00
V M42	1.69	2.75	1.00

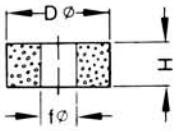

RK FIXATOR® OPTION SPECIFICATIONS

p

Spherical Washer Set for non-parallel bearing surfaces.

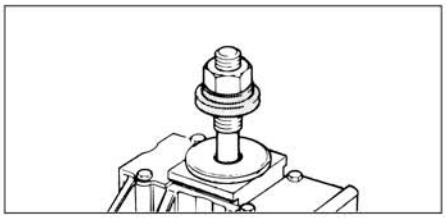

DIMENSIONS				
SIZE RK	DØ	H	dØ	bØ
I (M12)	40	9	30	13
I (M16)	40	9	30	17
II	44	10	36	21
III	56	13	44	25
IV	68	16	56	31
V M36	78	20	68	37
V M42	100	26	90	44

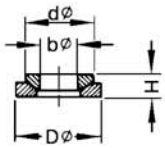

Max. 10° Angle Correction

r

Oversized Spherical Washer Set for non-parallel bearing surfaces.

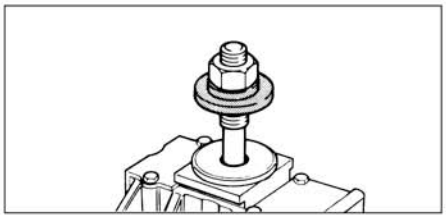

DIMENSIONS				
SIZE RK	DØ	H	dØ	bØ
I	44	10	36	17
II	56	13	44	21
III	68	16	56	25
IV	80	16	56	31
V M36	100	20	68	37
V M42	125	26	90	44

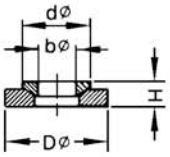

Max. 10° Angle Correction

z

Foam Centering Bushing for the concentric location of the anchor bolts in the machine foot holes.

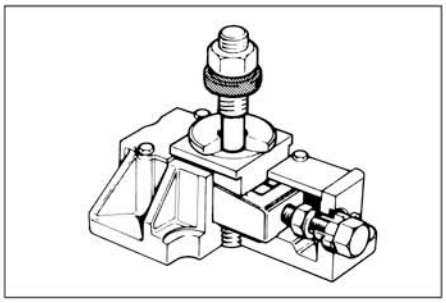

DIMENSIONS			
SIZE RK	fØ	DØ	H
I	16	32	25
II	20	40	25
III	24	44	25
IV	30	54	25
V M36	36	60	25
V M42	43	70	25

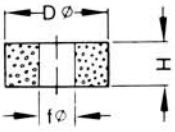

RK FIXATOR® OPTION SPECIFICATIONS

ste

Normal or Long Center Hold Down Stud for attaching the FIXATOR® to the machine.

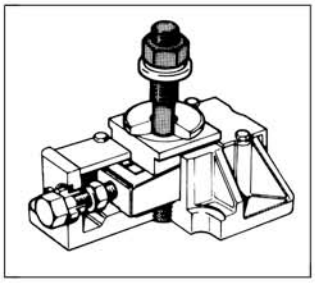

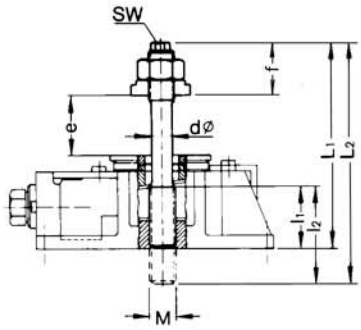

"a" = approx. 0,33 x M (roughly 1/3 x thread diameter)
Specify dimension "e" in your order!

DIMENSIONS													
SIZE					Normal		e		Long		e		Approx. Clamping
RK	M	dØ	SW	f	L_1	l_1	from	to	L_2	l_2	from	to	Force lbs.
I	—	—	—	—	—	—	—	—	—	—	—	—	—
II	M20	.63	13 mm	1.57	6.89	2.17	.79	2.17	8.07	3.35	1.97	3.35	18,200
III	M24	.75	17 mm	1.97	8.46	2.76	.79	2.76	10.24	4.54	2.56	4.53	25,800
IV	M30	.94	19 mm	2.16	10.24	3.35	1.18	3.35	12.20	5.31	3.15	5.31	40,900
V	M36	1.14	24 mm	2.56	12.40	4.13	1.57	4.13	14.17	5.90	3.94	5.91	59,500

ste/2

Two-Piece Center Hold Down Stud for attaching the FIXATOR® to the machine.

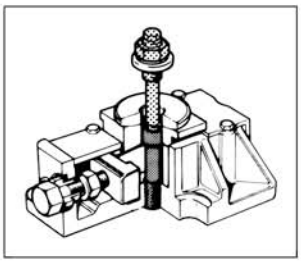

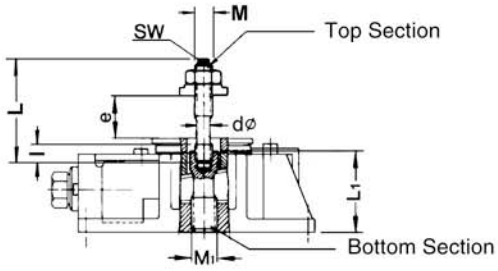

Specify dimension "e" in your order!

DIMENSIONS													
SIZE					Short ste/2		e dim.		Long ste/2		e dim.		
RK	M	M_1	dØ	SW	L	l	from	to	L	l	from	to	L1
I	—	—	—	—	—	—	—	—	—	—	—	—	—
II	M16	M20	.51	10 mm	5.12	2.17	0.79	2.36	6.10	2.36	2.56	3.35	2.17
III	M20	M24	.63	13 mm	5.51	1.97	0.79	1.97	7.48	3.15	2.17	3.94	2.76
IV	M24	M30	.75	17 mm	6.50	2.36	1.18	2.36	8.86	3.54	2.56	4.72	3.35
V	M30	M36	.94	19 mm	7.48	2.76	1.57	2.76	10.04	4.33	2.95	5.31	4.13

Approx. Clamping Force lbs.
—
11,900
18,200
25,800
40,900

RK FIXATOR® OPTION SPECIFICATIONS

ste

Normal or Long Center Hold Down Stud for attaching the FIXATOR® to the machine.

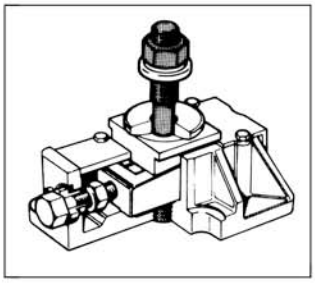

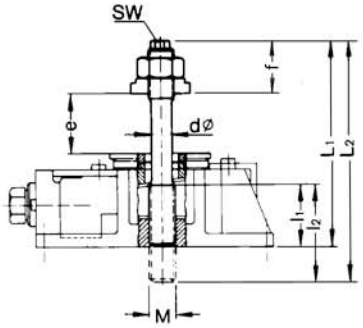

"a" = approx. 0,33 x M (roughly 1/3 x thread diameter)
Specify dimension "e" in your order!

DIMENSIONS													
SIZE					Normal		e		Long		e		Approx. Clamping
RK	M	dØ	SW	f	L_1	l_1	from	to	L_2	l_2	from	to	Force N Max.
I	—	—	—	—	—	—	—	—	—	—	—	—	—
II	M20	16	13	40	175	55	20	55	205	85	50	85	81,000
III	M24	19	17	50	215	70	20	70	260	115	65	115	115,000
IV	M30	24	19	55	260	85	30	85	310	135	80	135	182,000
V	M36	29	24	65	315	105	40	105	360	150	100	150	265,000

ste/2

Two-Piece Center Hold Down Stud for attaching the FIXATOR® to the machine.

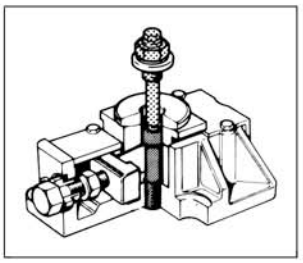

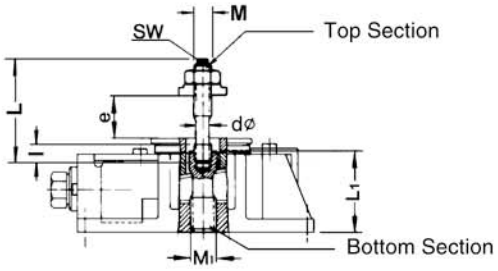

Specify dimension "e" in your order!

DIMENSIONS													
SIZE					Short ste/2		e dim.		Long ste/2		e dim.		
RK	M	M_1	dØ	SW	L	l	from	to	L	l	from	to	L1
I	—	—	—	—	—	—	—	—	—	—	—	—	—
II	M16	M20	13	10	130	55	20	60	155	60	65	85	55
III	M20	M24	16	13	140	50	20	50	190	80	55	100	70
IV	M24	M30	19	17	165	60	30	60	225	90	65	120	85
V	M30	M36	24	19	190	70	40	70	255	110	75	135	105

Approx. Clamping Force N Max.
—
53,000
81,000
115,000
182,000

RK FIXATOR® OPTION SPECIFICATIONS
(continued)

c

Side Anchor Bolts for connecting FIXATOR® to Foundations.

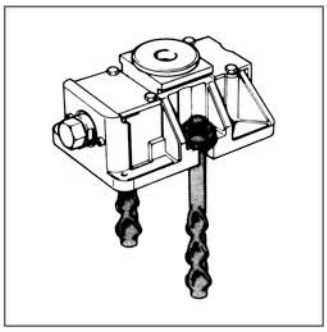

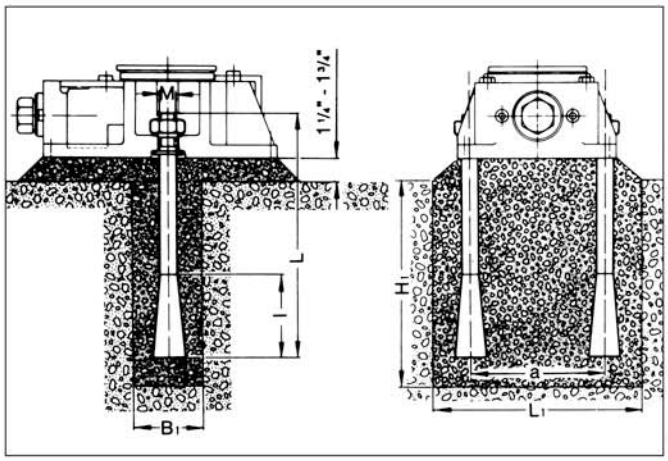

DIMENSIONS								
SIZE RK	M	L	l	a	Foundations L_1	B_1	H_1	Approx. Clamping Force lbs.
I	M12	5.91	2.76	3.54	5.50	2.50	5.50	14,600
II	M12	5.91	2.76	3.94	6.25	2.50	5.50	14,600
III	M16	9.84	3.54	5.12	8.00	2.75	9.50	26,900
IV	M20	11.81	3.94	6.30	9.50	3.25	11.50	42,700
V	M24	13.78	5.31	8.07	12.00	4.00	13.75	61,800

Note: Hole sizes and grout dam heights based on using UNISORB® V-1® Grout.

le

Adjustment Extension for adjusting FIXATORS® which are located in hard to reach places under machines.

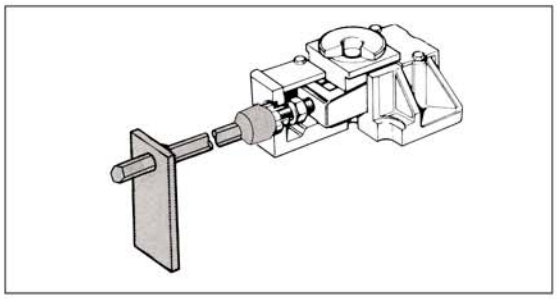

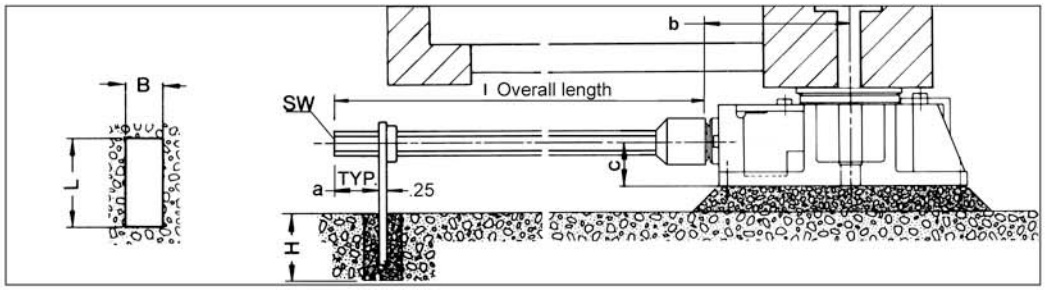

DIMENSIONS								
SIZE RK	TYP. a	b	c	SW	l	Foundations L	B	H
I	2.00	3.87	.83	.75	As Req'd	3.25	1.50	3.75
II	2.00	4.03	1.22	.75	As Req'd	3.25	1.50	3.75
III	2.00	5.03	1.57	.75	As Req'd	3.25	1.50	3.75
IV	2.00	5.97	1.93	.75	As Req'd	3.25	1.50	3.75
V	2.00	7.65	2.28	.75	As Req'd	3.25	1.50	3.75

Note: Hole sizes and grout dam heights based on using UNISORB® V-1® Grout.

RK FIXATOR® OPTION SPECIFICATIONS

c

Side Anchor Bolts for connecting FIXATOR® to Foundations.

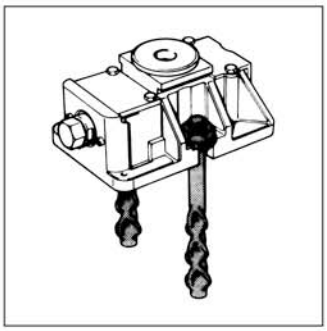

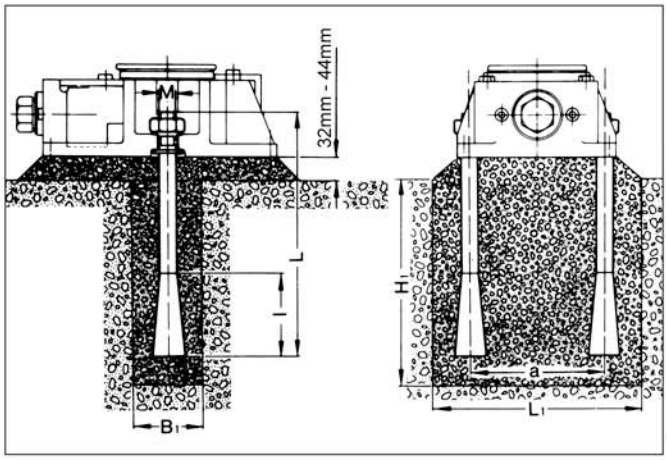

DIMENSIONS								
SIZE RK	M	L	l	a	Foundations L_1	B_1	H_1	Approx. Clamping Force N Max.
I	M12	150	70	90	140	60	140	65,000
II	M12	150	70	100	160	60	140	65,000
III	M16	250	90	130	200	70	240	120,000
IV	M20	300	100	160	240	80	290	190,000
V	M24	350	135	205	305	100	350	275,000

Note: Hole sizes and grout dam heights based on using UNISORB® V-1® Grout.

le

Adjustment Extension for adjusting FIXATORS® which are located in hard to reach places under machines.

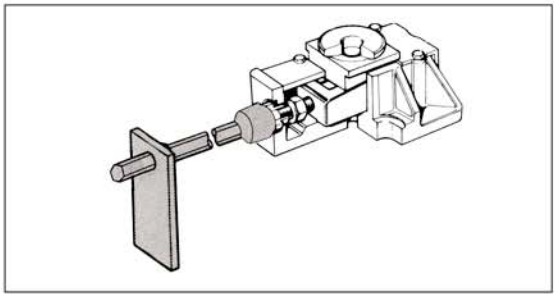

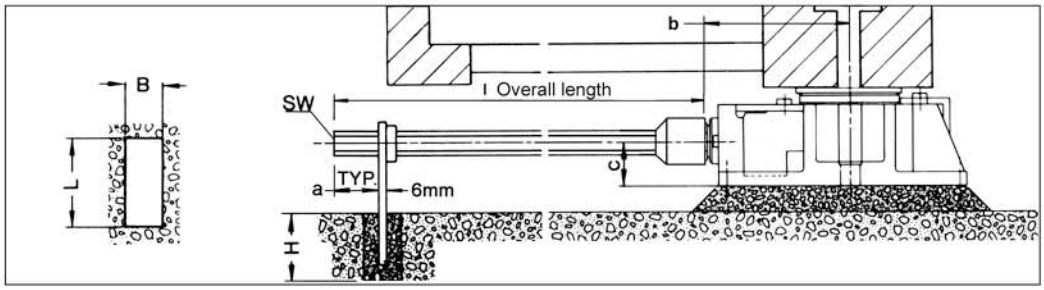

DIMENSIONS								
SIZE RK	TYP. a	b	c	SW	l	Foundations L	B	H
I	51	98	21	19	As Req'd	83	38	95
II	51	102	31	19	As Req'd	83	38	95
III	51	128	40	19	As Req'd	83	38	95
IV	51	152	49	19	As Req'd	83	38	95
V	51	194	58	19	As Req'd	83	38	95

Note: Hole sizes and grout dam heights based on using UNISORB® V-1® Grout.

RK FIXATOR® OPTION SPECIFICATIONS

d

Lateral Adjuster for adjusting machine location. (The use of option c is recommended along with option d.)

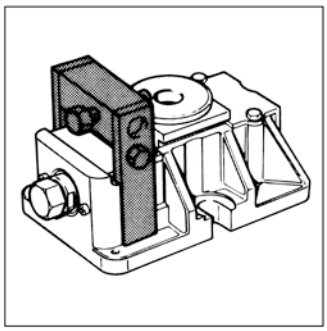

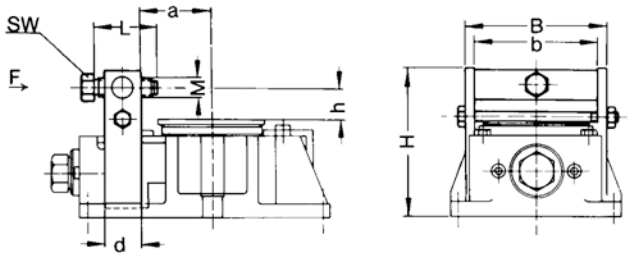

F = Maximum Horizontal Force Available

DIMENSIONS										
SIZE RK	M	L	SW	H	B	b	d	a	h	F → lbs.
I	M12	1.97	17mm	3.27	3.39	2.76	.98	1.57	.59	4,400
II	M16	2.36	19mm	4.17	4.02	3.39	1.18	1.69	.63	5,600
III	M16	2.36	19mm	5.08	5.08	4.29	1.38	2.17	.63	7,800
IV	M20	2.76	24mm	6.30	5.91	5.12	1.57	2.76	.79	8,900
V	M24	3.15	30mm	7.56	7.83	6.89	1.77	3.54	.94	13,400

dz

Offset Lateral Adjuster for adjusting machine location. (The use of option c is recommended along with option dz.)

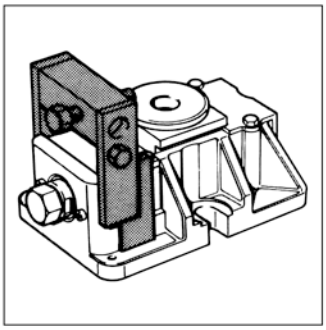

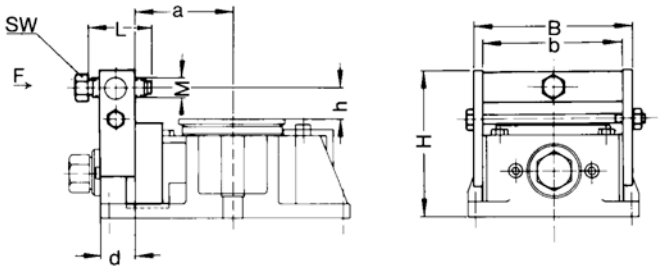

F = Maximum Horizontal Force Available

DIMENSIONS										
SIZE RK	M	L	SW	H	B	b	d	a	h	F → lbs.
I	M12	1.97	17mm	3.27	4.02	3.39	.98	2.24	.59	4,400
II	M16	2.36	19mm	4.17	4.65	4.02	1.18	2.56	.63	5,600
III	M16	2.36	19mm	5.08	5.87	5.08	1.38	3.15	.63	7,800
IV	M20	2.76	24mm	6.30	6.69	5.91	1.57	3.94	.79	8,900
V	M24	3.15	30mm	7.56	8.78	7.83	1.77	4.84	.94	13,400

RK FIXATOR® OPTION SPECIFICATIONS

d

Lateral Adjuster for adjusting machine location. (The use of option c is recommended along with option d.)

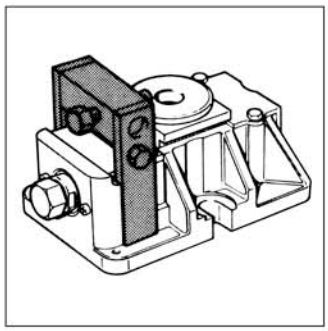

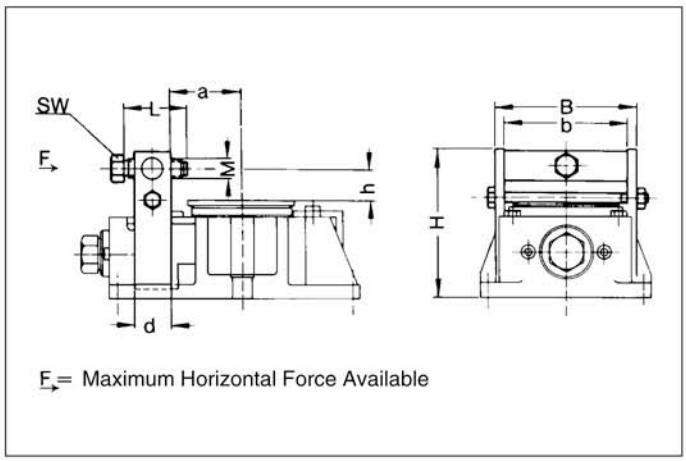

DIMENSIONS										
SIZE RK	M	L	SW	H	B	b	d	a	h	F → N
I	M12	50	17mm	83	86	70	25	40	15	20,000
II	M16	60	19mm	106	102	86	30	43	16	25,000
III	M16	60	19mm	129	129	109	35	55	16	35,000
IV	M20	70	24mm	160	160	130	40	70	20	40,000
V	M24	80	30mm	192	192	175	45	90	24	60,000

dz

Offset Lateral Adjuster for adjusting machine location. (The use of option c is recommended along with option dz.)

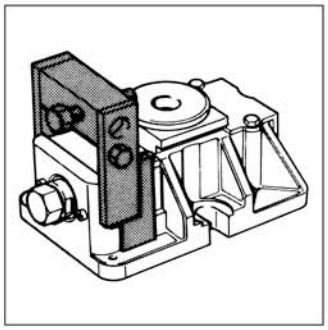

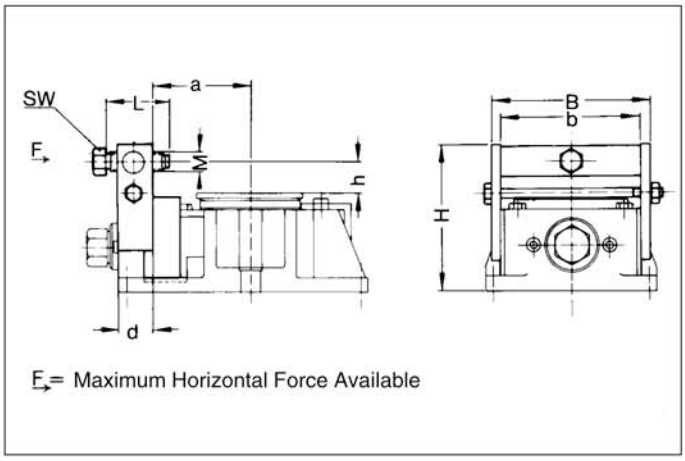

DIMENSIONS										
SIZE RK	M	L	SW	H	B	b	d	a	h	F → N
I	M12	50	17mm	83	102	86	25	57	15	20,000
II	M16	60	19mm	106	118	102	30	65	16	25,000
III	M16	60	19mm	129	149	129	35	80	16	35,000
IV	M20	70	24mm	160	170	150	40	100	20	40,000
V	M24	80	30mm	192	223	199	45	123	24	60,000

RK FIXATOR® OPTION SPECIFICATIONS
(continued)

m

Adjustment Bolt Enclosure for use with recessed FIXATORS®.

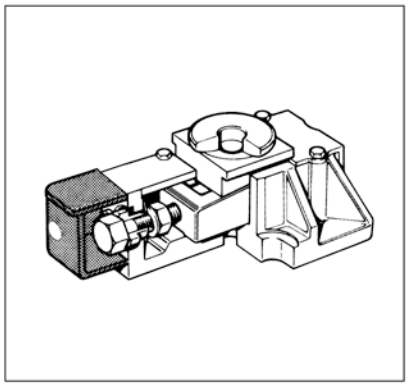

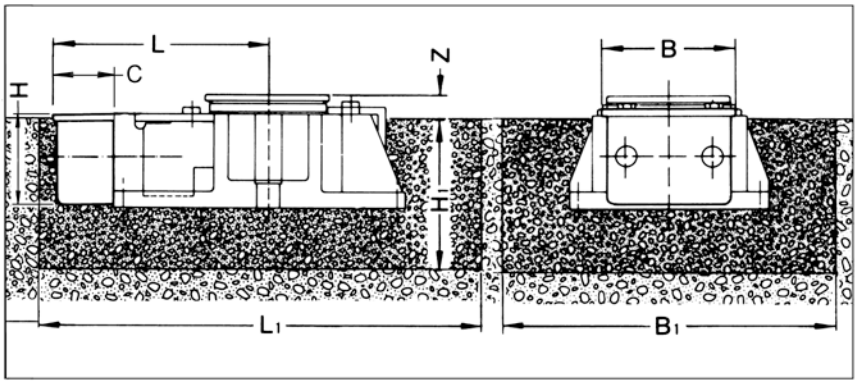

DIMENSIONS								
SIZE RK	L	B	C	H	Z	Foundations L_1	B_1	H_1
I	5.08	3.19	1.46	1.85	.79	12.25	6.50	2.75
II	5.43	3.62	1.65	2.32	.98	12.25	8.00	3.25
III	6.30	3.62	1.65	2.32	1.18	15.00	10.00	4.00
IV	8.11	5.35	2.52	3.78	1.38	17.75	12.00	4.75
V	9.65	5.35	2.56	3.78	1.57	21.75	13.00	5.50

Note: Hole sizes based on using UNISORB® V-1® Grout.

Recesses In Foundations for Options m + wes combined.

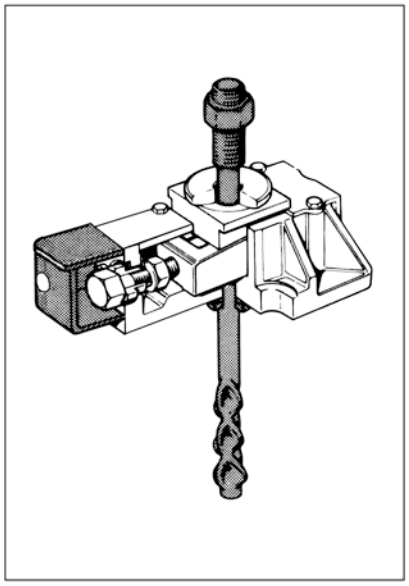

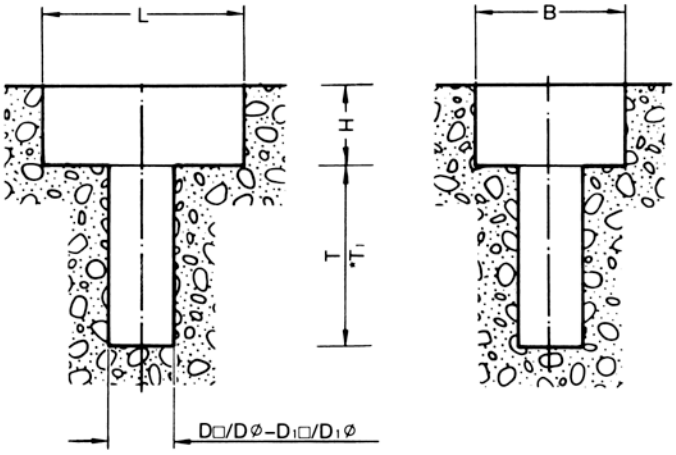

*Recess for larger anchor bolts.

DIMENSIONS							
SIZE RK	L	B	H	D	T	$*D_1$	$*T_1$
I	12.25	6.50	2.75	3.00	9.50	—	—
II	12.25	8.00	3.25	3.50	10.75	4.00	14.25
III	15.00	10.00	4.00	4.00	13.50	5.00	17.00
IV	17.75	12.00	4.75	5.00	16.25	6.00	23.25
V	21.75	13.00	5.50	6.00	22.50	7.00	30.00

Note: Hole sizes based on using UNISORB® V-1® Grout.

RK FIXATOR® OPTION SPECIFICATIONS
(continued)

m

Adjustment Bolt Enclosure for use with recessed FIXATORS®.

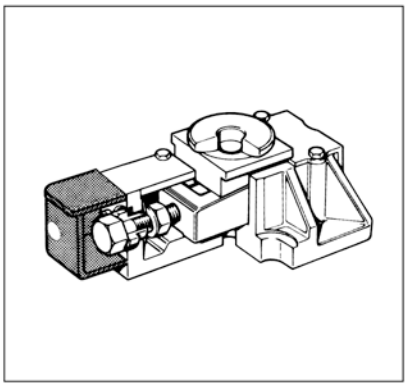

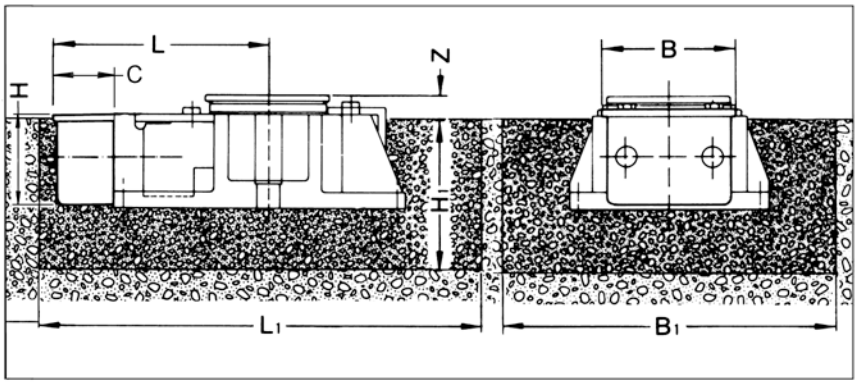

DIMENSIONS								
SIZE RK	L	B	C	H	Z	Foundations L_1	B_1	H_1
I	129	81	37	47	20	311	165	70
II	138	92	42	59	25	311	203	83
III	160	92	42	59	30	381	254	102
IV	206	136	64	96	35	451	305	121
V	245	136	65	96	40	552	330	140

Note: Hole sizes based on using UNISORB® V-1® Grout.

Recesses In Foundations for Options m + wes combined.

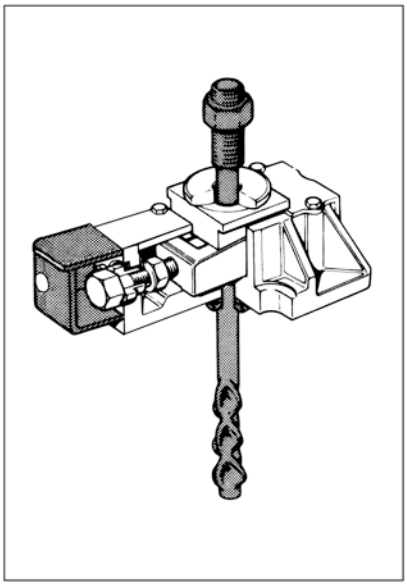

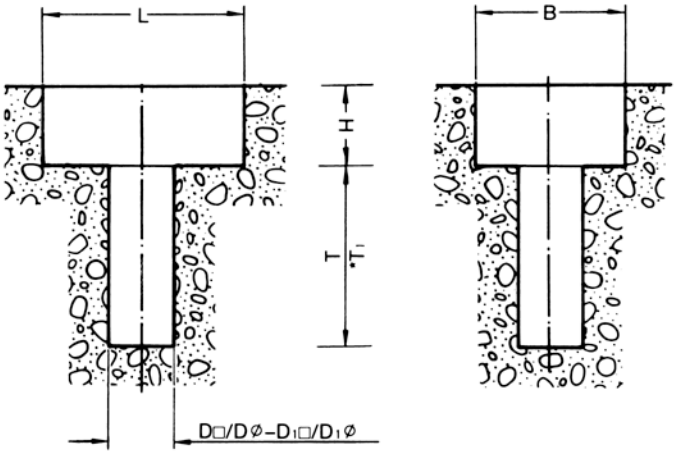

*Recess for larger anchor bolts.

DIMENSIONS							
SIZE RK	L	B	H	D	T	$*D_1$	$*T_1$
I	311	165	70	76	241	—	—
II	311	203	83	89	273	102	362
III	381	254	102	102	343	127	432
IV	451	305	121	127	413	152	591
V	552	330	140	152	572	178	762

Note: Hole sizes based on using UNISORB® V-1® Grout.

RK FIXATOR® OPTION SPECIFICATIONS
(continued)

les

Enclosed Adjustment Extension for adjusting recessed FIXATORS® which are located in hard to reach places under machines.

Note: Opt. m to be ordered separately.

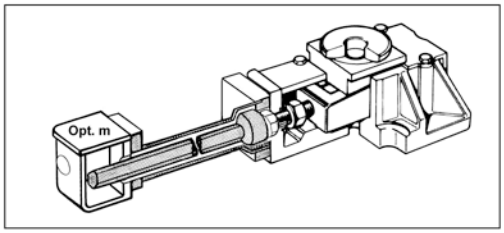

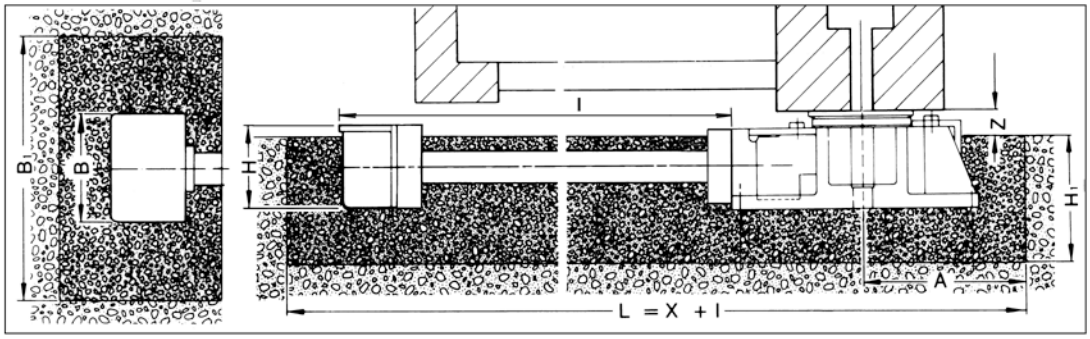

DIMENSIONS								
SIZE RK	B	H	Min. Dim. I	Min. Dim. A	Z	Foundations B_1	Foundations H_1	Foundations X
I	3.19	1.85	AS REQ'D	5.12	.79	6.50	2.75	10.50
II	3.62	2.32	AS REQ'D	5.51	.98	8.00	3.25	11.00
III	3.62	2.32	AS REQ'D	6.30	1.18	10.00	4.00	12.50
IV	5.35	3.78	AS REQ'D	7.87	1.38	12.00	4.75	15.00
V	5.35	3.78	AS REQ'D	9.06	1.57	13.00	5.50	17.50

Note: Hole sizes based on using UNISORB® V-1® Grout.

frot

Connection for mobile application.

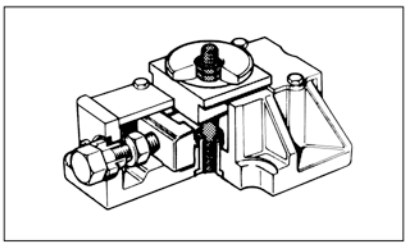

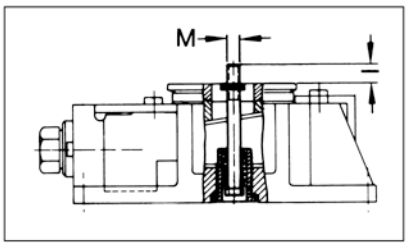

DIMENSIONS		
SIZE RK	M	I
I	.24	.31
II	.24	.31
III	.31	.31
IV	.31	.31
V	.31	.31

mon

Locking System for the top spherical washer. NOTE: Requires Opt. F and counterbore.

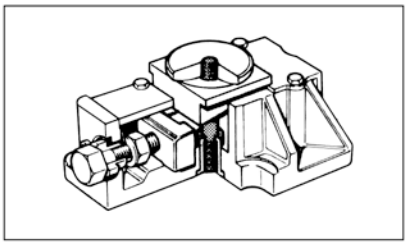

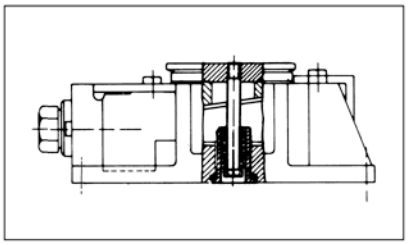

RK FIXATOR® OPTION SPECIFICATIONS
(continued)

les

Enclosed Adjustment Extension for adjusting recessed FIXATORS® which are located in hard to reach places under machines.

Note: Opt. m to be ordered separately.

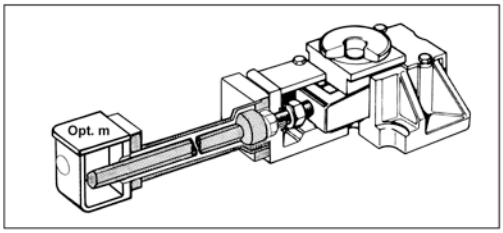

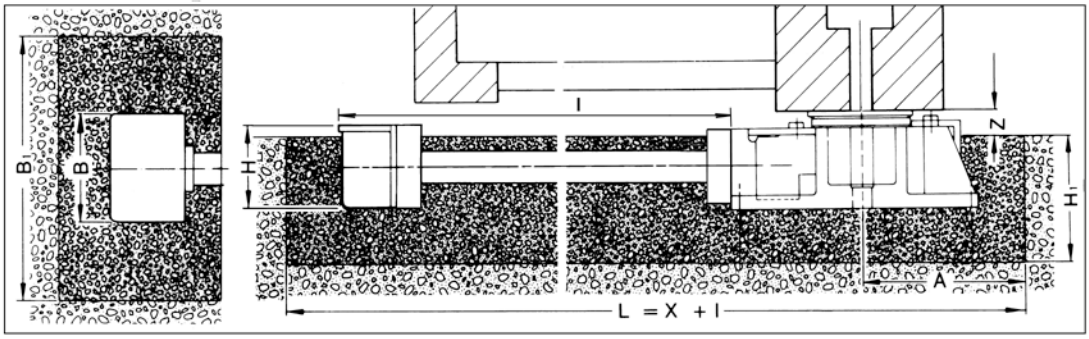

DIMENSIONS								
SIZE			Min. Dim.			Foundations		
RK	B	H	I	A	Z	B_1	H_1	X
I	81	47	AS REQ'D	130	20	165	70	267
II	92	59	AS REQ'D	140	25	203	83	280
III	92	59	AS REQ'D	160	30	254	102	318
IV	136	96	AS REQ'D	200	35	305	121	381
V	136	96	AS REQ'D	230	40	330	140	445

Note: Hole sizes based on using UNISORB® V-1® Grout.

frot

Connection for mobile application.

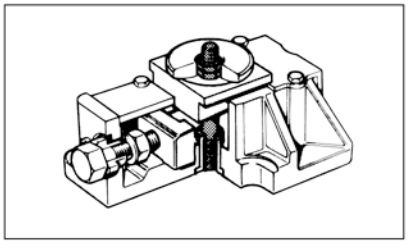

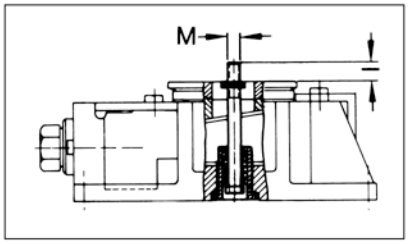

DIMENSIONS		
SIZE RK	M	I
I	6	8
II	6	8
III	8	8
IV	8	8
V	8	8

mon

Locking System for the top spherical washer. NOTE: Requires Opt. F and counterbore.

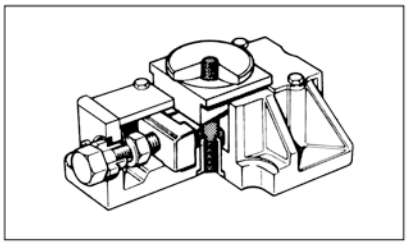

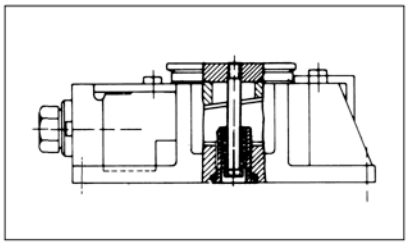

OVERVIEW

The machine to be installed is moved to its approximate position, supported with temporary blocks, and the FIXATORS® with their options are prehung from the machine base. The machine base is then moved into final position on the foundation. The FIXATORS® with their anchors suspended from the base are positioned and lowered into previously prepared grout cavities. The machine is rough aligned and permanently grouted into place. When the grout has cured sufficiently, the temporary blocks are removed. The anchor bolts are tightened and the machine is then precisely leveled and aligned with the FIXATOR® adjusting wedges. This approach eliminates the need for precise presetting of the mounts and results in substantial time savings.

STEP-BY-STEP

1. **FOUNDATION PREPARATION**—Prepare the foundation in accordance with accepted civil engineering practices. Grout cavities for the FIXATOR® base and anchor bolts may be provided by precasting them or by core drilling after pouring concrete. The best core drilling results can be obtained while the foundation is green (approximately 48 hours). Anchor bolt holes shall be in accordance with UNISORB® Drawing No. 469900-02. Grout cavities for recessed FIXATOR® mounting shall be in accordance with UNISORB® Drawing No. 469900-07.

2. **POSITION MACHINE**—When the concrete is cured sufficiently to support machine loads, prepare the machine for installation in accordance with the manufacturer's instructions and move into position on the foundation. The machine is supported temporarily on blocks with the anchor holes over the previously prepared grout cavities. Note: Temporary blocks should be high enough to permit assembly of FIXATOR® units to the machine base.

3. **ATTACH FIXATORS®**—Turn the FIXATOR® alignment and leveling adjustment screw fully counterclockwise to assure that the full travel of the wedge will be available during the alignment phase. Assemble the FIXATOR® with the anchor bolt and spherical washer set to the machine base. (Refer to the installation drawing included in this manual for proper assembly.) Position the "O" ring and set collar provided with the anchor bolt against the bottom of the FIXATOR®, securing it with the set screw provided. The anchor nut should be positioned so that three threads are exposed and only tightened sufficiently to hold the FIXATOR® unit in contact with the machine base.

4. **LOWER MACHINE** -- Lower the machine into final position, again supported by temporary blocks with the FIXATOR projected into the grout cavities. The machine should now be rough aligned to a value of plus or minus 1/16" (1.6mm). Note: Minimum clearance between the FIXATOR base and the foundation for grout placement must be 1/2" (12mm) for UNISORB Standard V-100 Epoxy Grout Formula and 1-1/2" (38mm) for UNISORB V-1 Cementitious grout. The three small presetting screws in the FIXATOR base flange may be used to level the FIXATOR to the foundation, if desired. Do not attempt to support the machine weight with these three screws.

5. **PREPARE GROUT FORMS**—Apply butyl tape around the bottom flange of grout form. Leave release paper on. Clean the floor thoroughly with oil free compressed air. Remove paper from butyl tape and press form securely to the floor for about 30 seconds to create a secure seal.

6. **POUR GROUT**—Prepare and pour UNISORB® Grout in accordance with grouting instructions provided with the material. Pour grout to cover FIXATOR® base flange as shown on UNISORB® Drawing No. 469900-02 for surface mounting or UNISORB® Drawing No. 469900-07 for recessed mounting. Grout forms used for surface mounting may be removed after grout has set. (See page 47 for instructions.)

7. **ADJUST FIXATORS®**—After grout cures and with anchor nuts loose, remove the temporary blocks. Snug anchor nuts with a small hand wrench and turn each adjusting screw two full turns. This action applies final tension to the anchor bolts and prepares the machine and the foundation. When raising the machine, adjust all FIXATORS® in sequence, starting at one end or the middle and working toward each end. Do not skip any units.

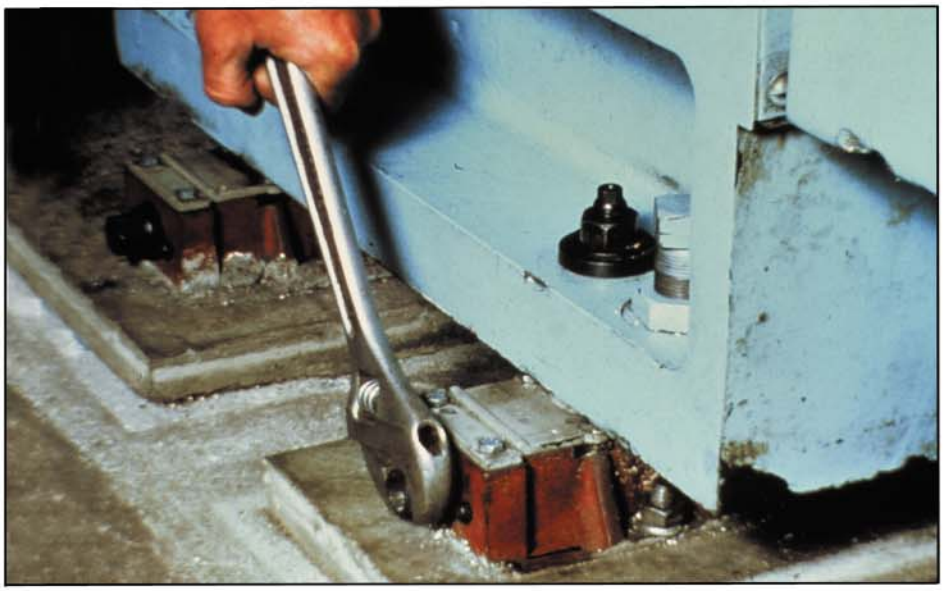

8. **FINAL MACHINE ALIGNMENT**—Any reliable alignment measuring system may be used. We suggest however that optical or electronic systems are far superior to bubble-level technology in that they respond much faster, thus allowing installers to take full advantage of the quick installation characteristics offered by the FIXATOR® system.

   Align the machine by locating the high spot and raising the remainder of the machine to match. The anchor nuts will remain tightened during this operation. If it becomes necessary to lower an individual FIXATOR® during final alignment do not exceed one full turn. If more than one turn is required the unit should be backed off until the anchor nut loosens; the nut is re-snugged, and the unit is raised to the desired adjustment. This is necessary to assure that the minimum anchor bolt tension is achieved. When final level and alignment is achieved, the machine may be placed into operation. Note: The base may be realigned at any time, if required. Simply adjust the FIXATOR® units, again raising the low points. The anchor nuts need not be loosened to accomplish the realignment.

STANDARD INSTALLATION DRAWING
RK FIXATOR® WITH OPTION 'WES'

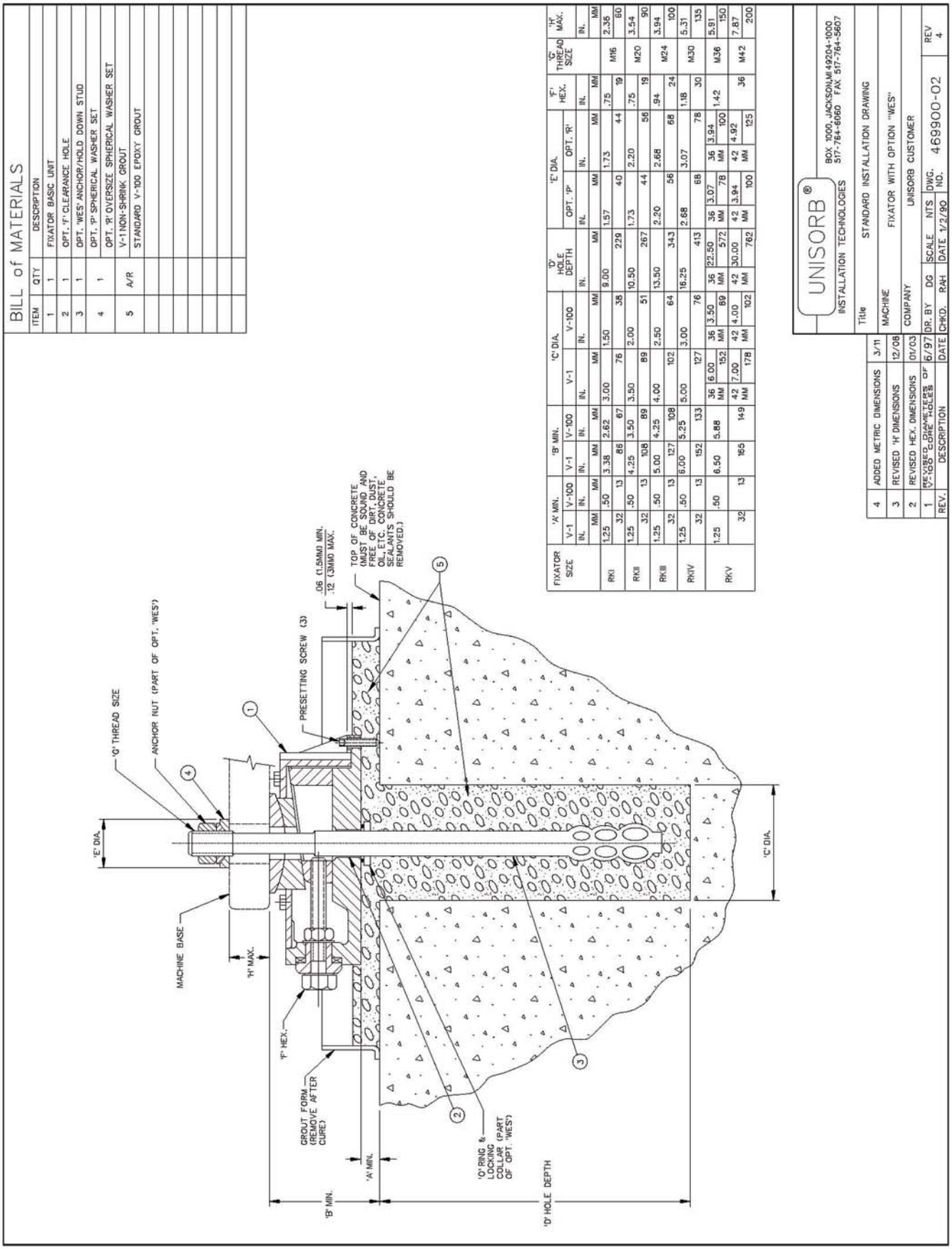

BILL of MATERIALS

ITEM	QTY	DESCRIPTION
1	1	FIXATOR BASIC UNIT
2	1	OPT. 'F' CLEARANCE HOLE
3	1	OPT. 'WES' ANCHOR/HOLD DOWN STUD
4	1	OPT. 'P' SPHERICAL WASHER SET OPT. 'R' OVERSIZE SPHERICAL WASHER SET
5	A/R	V-1 NON-SHRINK GROUT STANDARD V-100 EPOXY GROUT

FIXATOR SIZE	'A' MIN. V-1 IN.	'A' MIN. V-100 IN.	'A' MIN. V-1 MM	'A' MIN. V-100 MM	'B' MIN. V-1 IN.	'B' MIN. V-100 IN.	'B' MIN. V-1 MM	'B' MIN. V-100 MM	'C' DIA. V-1 IN.	'C' DIA. V-100 IN.	'C' DIA. V-1 MM	'C' DIA. V-100 MM	'D' HOLE DEPTH IN.	'D' HOLE DEPTH MM	'E' DIA. OPT. 'P' IN.	'E' DIA. OPT. 'P' MM	'E' DIA. OPT. 'R' IN.	'E' DIA. OPT. 'R' MM	'F' HEX. IN.	'F' HEX. MM	'G' THREAD SIZE	'H' MAX. IN.	'H' MAX. MM
RKI	1.25	.50	32	13	3.38	2.62	86	67	3.00	1.50	76	38	9.00	229	1.57	40	1.73	44	.75	19	M16	2.36	60
RKII	1.25	.50	32	13	4.25	3.50	108	89	3.50	2.00	89	51	10.50	267	1.73	44	2.20	56	.75	19	M20	3.54	90
RKIII	1.25	.50	32	13	5.00	4.25	127	108	4.00	2.50	102	64	13.50	343	2.20	56	2.68	68	.94	24	M24	3.94	100
RKIV	1.25	.50	32	13	6.00	5.25	152	133	5.00	3.00	127	76	16.25	413	2.68	68	3.07	78	1.18	30	M30	5.31	135
RKV	1.25	.50	32	13	6.50	5.88	165	149	36 MM 7.00	36 MM 4.00	152 178	89 102	36 MM 22.50	42 MM 572	36 MM 3.07	42 MM 78	36 MM 3.94	42 MM 100	1.42	36	M36	5.91	150
													42 MM 30.00	762	42 MM 3.94	100	42 MM 4.92	125			M42	7.87	200

STANDARD INSTALLATION DRAWING
RK FIXATOR® WITH OPTION 'STE' ON STEEL PLATE

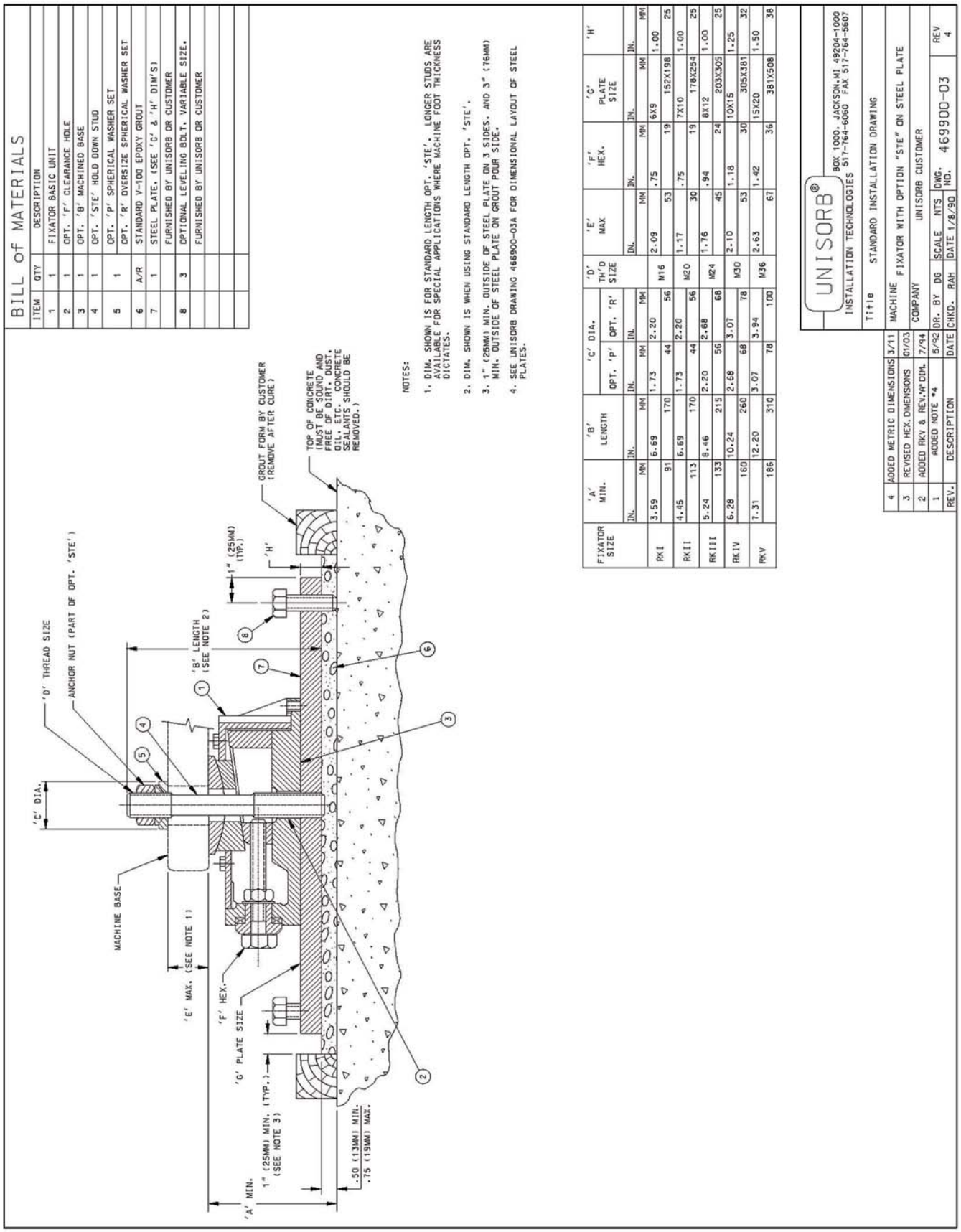

FIXATOR SIZE	'A' MIN.		'B' LENGTH		'C' DIA. OPT. 'P'		'C' DIA. OPT. 'R'		'D' TH'D SIZE	'E' MAX		'F' HEX.		'G' PLATE SIZE		'H'
	IN.	MM	IN.	MM	IN.	MM	IN.	MM		IN.	MM	IN.	MM	IN.	MM	IN. / MM
RKI	3.59	91	6.69	170	1.73	44	2.20	56	M16	2.09	53	.75	19	6X9 / 152X198		1.00 / 25
RKII	4.45	113	6.69	170	1.73	44	2.20	56	M20	1.17	30	.75	19	7X10 / 178X254		1.00 / 25
RKIII	5.24	133	8.46	215	2.20	56	2.68	68	M24	1.76	45	.94	24	8X12 / 203X305		1.00 / 25
RKIV	6.28	160	10.24	260	2.68	68	3.07	78	M30	2.10	53	1.18	30	10X15 / 305X381		1.25 / 32
RKV	7.31	186	12.20	310	3.07	78	3.94	100	M36	2.63	67	1.42	36	15X20 / 381X508		1.50 / 38

STANDARD INSTALLATION DRAWING
STEEL PLATES FOR USE WITH RK FIXATORS® AND OPTION 'STE'

BILL of MATERIALS

ITEM	QTY	DESCRIPTION

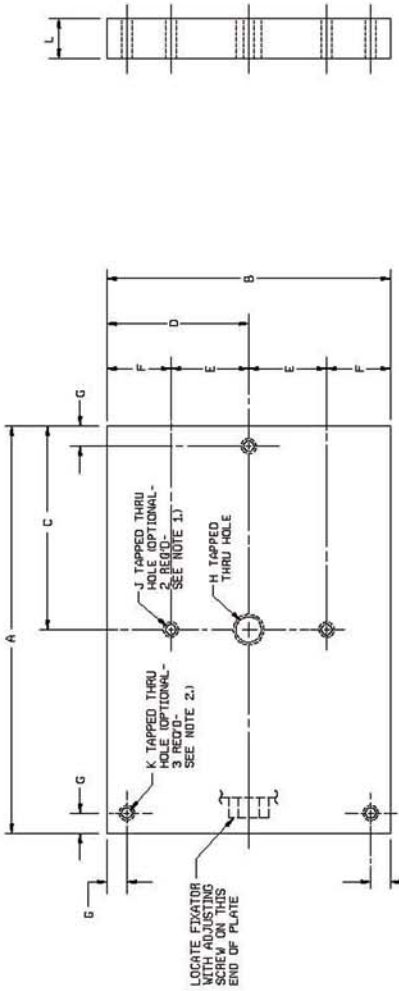

STEEL PLATE

FIXATOR SIZE	A IN.	A MM	B IN.	B MM	C IN.	C MM	D IN.	D MM	E IN.	E MM	F IN.	F MM	G IN.	G MM	H	J	K	L IN.	L MM
RKI	9.00	229	6.00	152	4.50	114	3.00	76	1.81	46	1.19	30	.50	13	M16	3/8-16	1/4-20	1.00	25
RKII	10.00	254	7.00	178	5.00	127	3.50	89	2.00	51	1.50	38	.50	13	M20	3/8-16	1/4-20	1.00	25
RKIII	12.00	305	8.00	203	6.00	152	4.00	102	2.62	67	1.38	35	.50	13	M24	1/2-13	1/4-20	1.00	25
RKIV	15.00	381	10.00	254	7.50	191	5.00	127	3.18	81	1.82	46	.50	13	M30	3/4-10	1/4-20	1.25	25
RKV	20.00	508	15.00	381	10.00	254	7.50	191	4.04	103	3.47	88	.75	19	M36	1-8	3/8-16	1.50	38

FIXATOR SIZE	BOLTS FOR TAPPED HOLES: J (2) HOLES	K (3) HOLES
RKI	3/8-16 X 1.50 LONG HEX. HEAD WITH FLAT WASHER	1/4-20 X 2.00 LONG HEX. HEAD
RKII	3/8-16 X 1.50 LONG HEX. HEAD WITH FLAT WASHER	1/4-20 X 2.00 LONG HEX. HEAD
RKIII	1/2-13 X 1.75 LONG HEX. HEAD WITH FLAT WASHER	1/4-20 X 2.00 LONG HEX. HEAD
RKIV	3/4-10 X 2.25 LONG HEX. HEAD WITH FLAT WASHER	1/4-20 X 2.25 LONG HEX. HEAD
RKV	1-8 X 2.25 LONG HEX. HEAD WITH FLAT WASHER	3/8-16 X 2.50 LONG HEX. HEAD

NOTES:

1. TAPPED HOLES 'J' WILL ONLY BE REQ'D. WHEN OPT. 'D' LATERAL STABILIZER IS USED.
2. TAPPED HOLES 'K' WILL ONLY BE REQ'D IF CUSTOMER IS GOING TO USE PRE-LEVELING BOLTS.
3. FOR FIXATOR INSTALLATION DRAWING UTILIZING STEEL PLATES SEE UNISORB DRAWING 469900-03.

REV.	DESCRIPTION	DATE	CHKD.	RAH
2	ADDED METRIC DIMENSIONS	03/11		
1	ADDED RKV	7/94	DR. BY	DG

UNISORB®
INSTALLATION TECHNOLOGIES
BOX 1000, JACKSON, MI 49204-1000
517-764-6060 FAX 517-764-5607

Title: DIMENSIONAL LAYOUT

MACHINE: STEEL PLATES FOR USE WITH FIXATORS & OPT. "STE"

COMPANY: UNISORB CUSTOMER

SCALE: NTS | DATE: 5/11/92 | DWG. NO. 469900-03A | REV 2

STANDARD INSTALLATION DRAWING
RK FIXATOR® WITH OPTION 'STE'

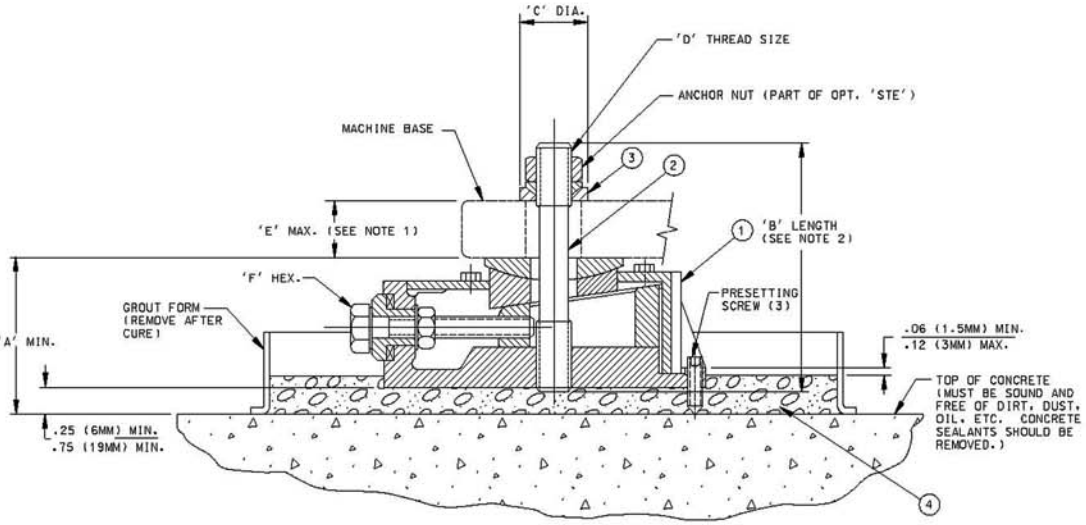

BILL of MATERIALS

ITEM	QTY	DESCRIPTION
1	1	FIXATOR BASIC UNIT
2	1	OPT. 'STE' HOLD DOWN STUD
3	1	OPT. 'P' SPHERICAL WASHER SET
		OPT. 'R' OVERSIZE SPHERICAL WASHER SET
4	A/R	STANDARD V-100 EPOXY GROUT

NOTES:

1. DIM. SHOWN IS FOR STANDARD LENGTH OPT. 'STE'. LONGER STUDS ARE AVAILABLE FOR SPECIAL APPLICATIONS WHERE MACHINE FOOT THICKNESS DICTATES.
2. DIM. SHOWN IS WHEN USING STANDARD LENGTH OPT. 'STE'.

FIXATOR SIZE	'A' MIN.	'B' LENGTH	'C' DIA. OPT. 'P'	'C' DIA. OPT. 'R'	'D' TH'D SIZE	'E' MAX.	'F' HEX.
	IN.	IN.	IN.	IN.		IN.	IN.
	MM	MM	MM	MM		MM	MM
RKI	—	—	—	—	—	—	—
RKII	3.20	6.69	1.73	2.20	M20	2.17	.75
	81	170	44	56		55	19
RKIII	4.01	8.46	2.20	2.68	M24	2.76	.94
	102	215	56	68		70	24
RKIV	4.78	10.24	2.68	3.07	M30	3.35	1.18
	121	260	68	78		85	30
RKV	5.56	12.20	3.07	3.94	M36	4.13	1.42
	141	310	78	100		105	36

UNISORB®
INSTALLATION TECHNOLOGIES
BOX 1000, JACKSON, MI 49204-1000
517-764-6060 FAX 517-764-5607

Title: STANDARD INSTALLATION DRAWING
MACHINE: FIXATOR WITH OPTION "STE"
COMPANY: UNISORB CUSTOMER

REV.	DESCRIPTION	DATE
2	ADDED METRIC DIMENSIONS	03/11
1	REVISED HEX. DIMENSIONS	01/03

DR. BY DG | SCALE NTS | DWG. NO. 469900-04 | REV 2
CHKD. RAH | DATE 3/8/90

STANDARD INSTALLATION DRAWING
RK FIXATOR® WITH OPTIONS 'STE' AND 'C'

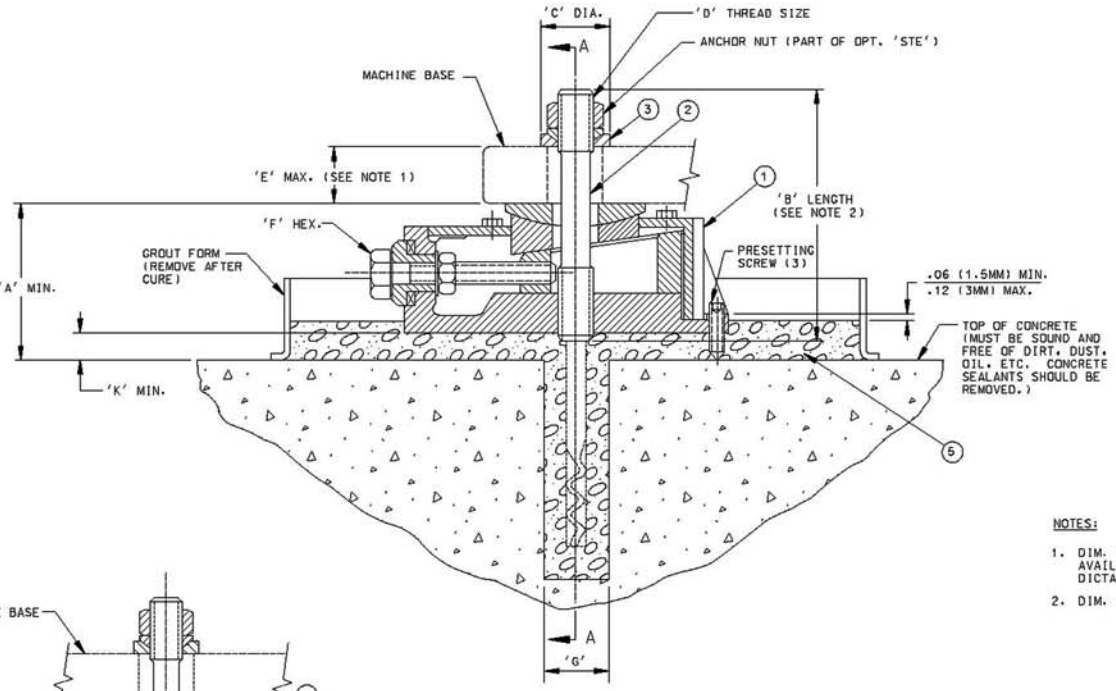

BILL of MATERIALS

ITEM	QTY	DESCRIPTION
1	1	FIXATOR BASIC UNIT
2	1	OPT. 'STE' HOLD DOWN STUD
3	1	OPT. 'P' SPHERICAL WASHER SET
		OPT. 'R' OVERSIZE SPHERICAL WASHER SET
4	1	OPT. 'C' SIDE ANCHOR BOLT (2 BOLTS PER UNIT)
5	A/R	V-1 NON-SHRINK GROUT
		STANDARD V-100 EPOXY GROUT

NOTES:

1. DIM. SHOWN IS FOR STANDARD LENGTH OPT. 'STE' LONGER STUDS ARE AVAILABLE FOR SPECIAL APPLICATIONS WHERE MACHINE FOOT THICKNESS DICTATES.
2. DIM. SHOWN IS WHEN USING STANDARD LENGTH OPT. 'STE'.

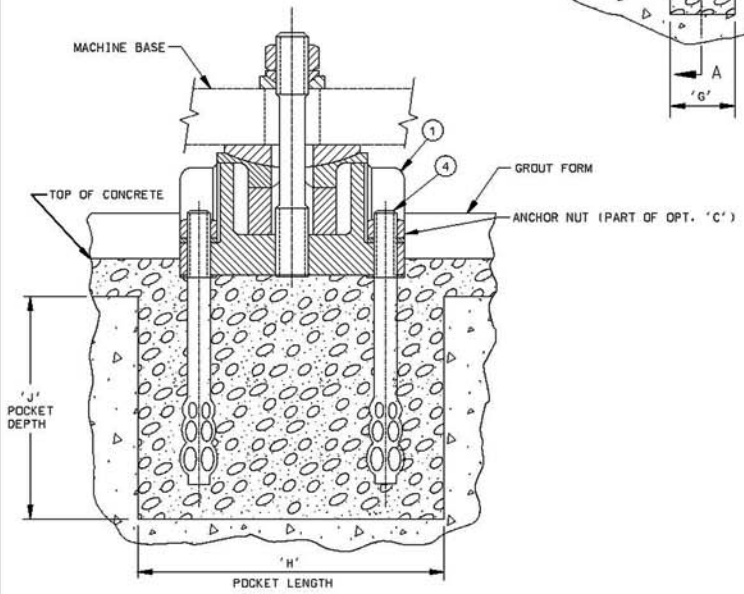

SECTION A-A

FIXATOR SIZE	'A' MIN. V-1	'A' MIN. V-100	'B' LENGTH	'C' DIA. OPT. 'P'	'C' DIA. OPT. 'R'	'D' TH'D SIZE	'E' MAX.	'F' HEX.	'G' V-1	'G' V-100	'H' V-1	'H' V-100	'J' POCKET DEPTH	'K' MIN. V-1	'K' MIN. V-100
	IN. / MM	IN. / MM	IN. / MM	IN. / MM	IN. / MM		IN. / MM	IN. / MM	IN. / MM	IN. / MM	IN. / MM	IN. / MM	IN. / MM	IN. / MM	IN. / MM
RKI	—	—	—	—	—	—	—	—	—	—	—	—	—	—	—
RKII	4.25 / 108	3.50 / 89	6.69 / 170	1.73 / 44	2.20 / 56	M20	2.17 / 55	.75 / 19	2.50 / 64	1.75 / 44	6.25 / 159	5.50 / 140	5.50 / 140	1.25 / 32	.50 / 13
RKIII	5.00 / 127	4.25 / 108	8.46 / 215	2.20 / 56	2.68 / 68	M24	2.76 / 70	.94 / 24	2.75 / 70	2.00 / 51	8.00 / 203	7.25 / 184	9.50 / 241	1.25 / 32	.50 / 13
RKIV	6.00 / 152	6.25 / 159	10.24 / 260	2.68 / 68	3.07 / 78	M30	3.35 / 85	1.18 / 30	3.25 / 83	2.50 / 64	9.50 / 241	9.00 / 229	11.50 / 292	1.25 / 32	.50 / 13
RKV	6.50 / 165	5.88 / 149	12.20 / 310	3.07 / 78	3.94 / 100	M36	4.13 / 105	1.42 / 36	4.00 / 102	3.50 / 89	12.00 / 305	10.50 / 267	13.75 / 349	1.25 / 32	.50 / 13

UNISORB®
INSTALLATION TECHNOLOGIES
BOX 1000, JACKSON, MI 49204-1000
517-764-6060 FAX 517-764-5607

Title: STANDARD INSTALLATION DRAWING
MACHINE: FIXATOR WITH OPTIONS "STE" AND "C"
COMPANY: UNISORB CUSTOMER

REV.	DESCRIPTION	DATE
2	ADDED METRIC DIMENSIONS	3/11
1	REVISED HEX. DIMENSIONS	01/03

DR. BY DG | SCALE NTS | DWG. NO. 469900-05 | REV 2
CHKD. RAH | DATE 3/21/90

STANDARD INSTALLATION DRAWING
RK FIXATOR® WITH OPTIONS 'STE', 'C' AND 'D'

BILL of MATERIALS

ITEM	QTY	DESCRIPTION
1	1	FIXATOR BASIC UNIT
2	1	OPT. 'STE' HOLD DOWN STUD
3	1	OPT. 'P' SPHERICAL WASHER SET OPT. 'R' OVERSIZE SPHERICAL WASHER SET
4	1	OPT. 'C' SIDE ANCHOR BOLT (2 BOLTS PER UNIT)
5	1	OPT. 'D' LATERAL STABILIZER
6	A/R	V-1 NON-SHRINK GROUT STANDARD V-100 EPOXY GROUT

NOTES:

1. DIM. SHOWN IS FOR STANDARD LENGTH OPT. 'STE'. LONGER STUDS ARE AVAILABLE FOR SPECIAL APPLICATIONS WHERE MACHINE FOOT THICKNESS DICTATES.
2. DIM. SHOWN IS WHEN USING STANDARD LENGTH OPT. 'STE'.

FIXATOR SIZE	'A' MIN. V-1	'A' MIN. V-100	'B' LENGTH	'C' DIA. OPT. 'P'	'C' DIA. OPT. 'R'	'D' TH'D SIZE	'E' MAX.	'F' HEX.	'G' V-1	'G' V-100	'H' V-1	'H' V-100	'J' POCKET DEPTH	'K' MIN. V-1	'K' MIN. V-100
	IN. / MM	IN. / MM	IN. / MM	IN. / MM	IN. / MM		IN. / MM	IN. / MM	IN. / MM	IN. / MM	IN. / MM	IN. / MM	IN. / MM	IN. / MM	IN. / MM
RKI	— / —	— / —	— / —	— / —	— / —	—	— / —	— / —	— / —	— / —	— / —	— / —	— / —	— / —	— / —
RKII	4.25 / 108	3.50 / 89	6.69 / 170	1.73 / 44	2.20 / 56	M20	2.17 / 55	.75 / 19	2.50 / 64	1.75 / 44	6.25 / 159	5.50 / 140	5.50 / 140	1.25 / 32	.50 / 13
RKIII	5.00 / 127	4.25 / 108	8.46 / 215	2.20 / 56	2.68 / 68	M24	2.76 / 70	.94 / 24	2.75 / 70	2.00 / 51	8.00 / 203	7.25 / 184	9.50 / 241	1.25 / 32	.50 / 13
RKIV	6.00 / 152	6.25 / 159	10.24 / 260	2.68 / 68	3.07 / 78	M30	3.35 / 85	1.18 / 30	3.25 / 83	2.50 / 64	9.50 / 241	9.00 / 229	11.50 / 292	1.25 / 32	.50 / 13
RKV	6.50 / 165	5.88 / 149	12.20 / 310	3.07 / 78	3.94 / 100	M36	4.13 / 105	1.42 / 36	4.00 / 102	3.50 / 89	12.00 / 305	10.50 / 267	13.75 / 349	1.25 / 32	.50 / 13

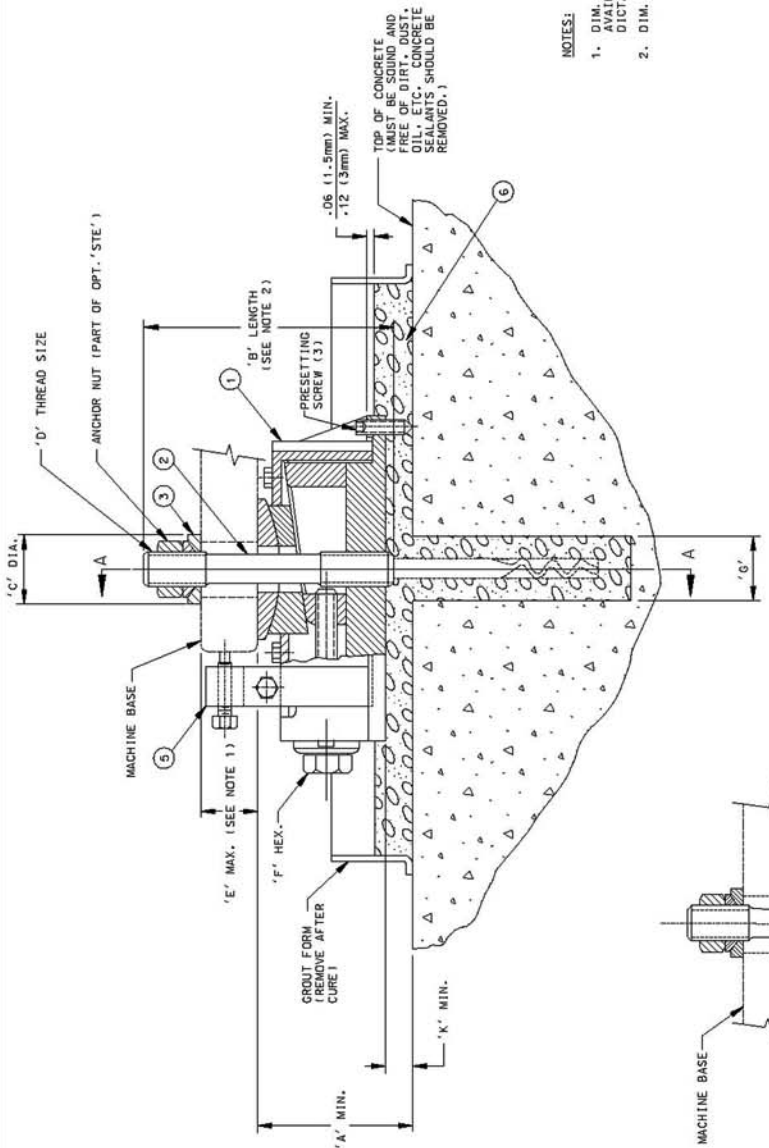

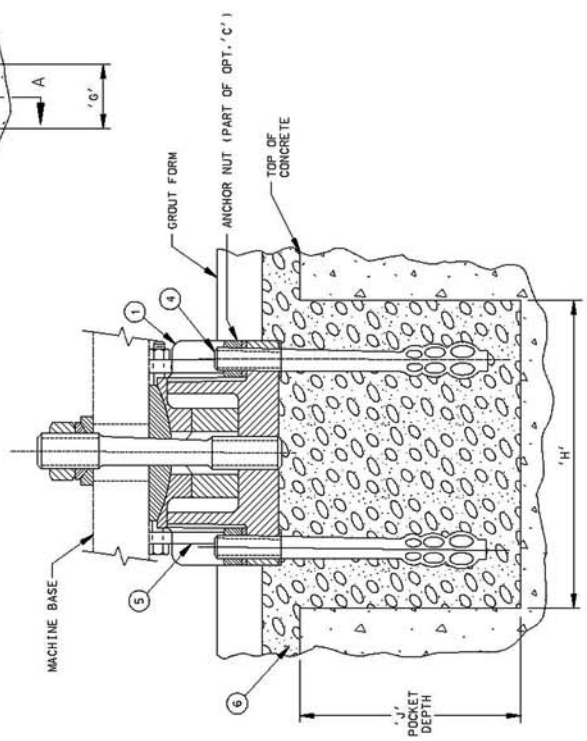

SECTION A-A

UNISORB®
INSTALLATION TECHNOLOGIES
BOX 1000, JACKSON, MI 49204-1000
517-764-6060 FAX 517-764-5607

Title: STANDARD INSTALLATION DRAWING

MACHINE: FIXATOR WITH OPTIONS "STE", "C" AND "D"

COMPANY: UNISORB CUSTOMER

REV.	DESCRIPTION	DATE	CHKD. RAH	DATE 4/2/90	DWG. NO. 469900-06	REV 2
1	REVISED HEX. DIMENSIONS	01/03	DR. BY DG	SCALE NTS		
2	ADDED METRIC DIMENSIONS	3/11				

STANDARD INSTALLATION DRAWING
RK FIXATOR® WITH OPTIONS 'WES' AND 'M'

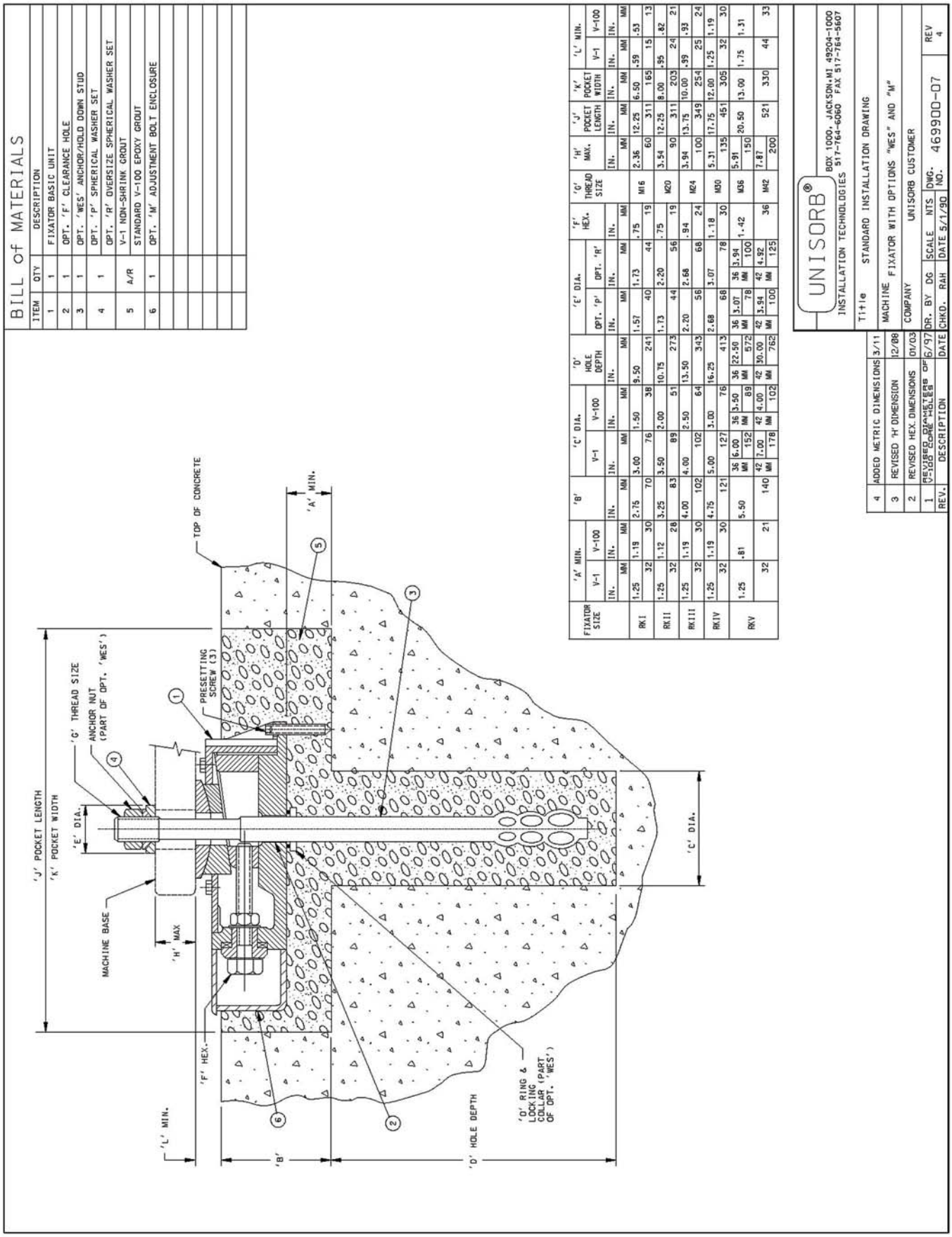

FIXATOR SIZE	'A' MIN. V-1 IN.	'A' MIN. V-100 IN.	'B' IN.	'C' DIA. V-1 IN.	'C' DIA. V-100 IN.	'D' HOLE DEPTH IN.	'E' DIA. OPT. 'P' IN.	'E' DIA. OPT. 'R' IN.	'F' HEX. IN.	'G' THREAD SIZE	'H' MAX. IN.	'J' POCKET LENGTH IN.	'K' POCKET WIDTH IN.	'L' MIN. V-1 IN.	'L' MIN. V-100 IN.
	MM	MM	MM	MM	MM	MM	MM	MM	MM		MM	MM	MM	MM	MM
RKI	1.25	1.19	2.75	3.00	1.50	9.50	1.57	1.73	.75	M16	2.36	12.25	6.50	.59	.53
	32	30	70	76	38	241	40	44	19		60	311	165	15	13
RKII	1.25	1.12	3.25	3.50	2.00	10.75	1.73	2.20	.75	M20	3.54	12.25	8.00	.95	.82
	32	28	83	89	51	273	44	56	19		90	311	203	24	21
RKIII	1.25	1.19	4.00	4.00	2.50	13.50	2.20	2.68	.94	M24	3.94	13.75	10.00	.99	.93
	32	30	102	102	64	343	56	68	24		100	349	254	25	24
RKIV	1.25	1.19	4.75	5.00	3.00	16.25	2.68	3.07	1.18	M30	5.31	17.75	12.00	1.25	1.19
	32	30	121	127	76	413	68	78	30		135	451	305	32	30
RKV	1.25	.81	5.50	36 6.00	36 3.50	36 (22.50)	36 3.07	36 3.94	1.42	M36	5.91	20.50	13.00	1.75	1.31
				MM 152	MM 89	MM 572	MM 78	MM 100			150				
	32	21	140	42 7.00	42 4.00	42 30.00	42 3.94	42 4.92	36	M42	7.87	521	330	44	33
				MM 178	MM 102	MM 762	MM 100	MM 125			200				

BILL of MATERIALS

ITEM	QTY	DESCRIPTION
1	1	FIXATOR BASIC UNIT
2	1	OPT. 'F' CLEARANCE HOLE
3	1	OPT. 'WES' ANCHOR/HOLD DOWN STUD
4	1	OPT. 'P' SPHERICAL WASHER SET OPT. 'R' OVERSIZE SPHERICAL WASHER SET
5	A/R	V-1 NON-SHRINK GROUT STANDARD V-100 EPOXY GROUT
6	1	OPT. 'M' ADJUSTMENT BOLT ENCLOSURE

UNISORB®
INSTALLATION TECHNOLOGIES
BOX 1000, JACKSON, MI 49204-1000
517-764-6060 FAX 517-764-5607

Title STANDARD INSTALLATION DRAWING
MACHINE FIXATOR WITH OPTIONS "WES" AND "M"
COMPANY UNISORB CUSTOMER
DR. BY DG | SCALE NTS | DWG. NO. 469900-07 | REV 4
CHKD. RAH | DATE 5/1/90

REV.	DESCRIPTION	DATE
4	ADDED METRIC DIMENSIONS	3/11
3	REVISED 'H' DIMENSION	12/08
2	REVISED HEX. DIMENSIONS	01/03
1	REVISED DIAMETERS OF V-100 CORE HOLES	6/97

STANDARD INSTALLATION DRAWING
RK FIXATOR® WITH OPTIONS 'WES', 'M' AND 'D'

BILL of MATERIALS

ITEM	QTY	DESCRIPTION
1	1	FIXATOR BASIC UNIT
2	1	OPT. 'F' CLEARANCE HOLE
3	1	OPT. 'WES' ANCHOR/HOLD DOWN STUD
4	1	OPT. 'P' SPHERICAL WASHER SET OPT. 'R' OVERSIZE SPHERICAL WASHER SET
5	A/R	V-1 NON-SHRINK GROUT STANDARD V-100 EPOXY GROUT
6	1	OPT. 'M' ADJUSTMENT BOLT ENCLOSURE
7	1	OPT. 'D' LATERAL STABILIZER

FIXATOR SIZE	'A' MIN. V-1 IN.	'A' MIN. V-1 MM	'A' MIN. V-100 IN.	'A' MIN. V-100 MM	'B' IN.	'B' MM	'C' DIA. V-1 IN.	'C' DIA. V-1 MM	'C' DIA. V-100 IN.	'C' DIA. V-100 MM	'D' HOLE DEPTH IN.	'D' HOLE DEPTH MM	'E' DIA. OPT. 'P' IN.	'E' DIA. OPT. 'P' MM	'E' DIA. OPT. 'R' IN.	'E' DIA. OPT. 'R' MM	'F' HEX. IN.	'F' HEX. MM	'G' THREAD SIZE	'H' MAX. IN.	'H' MAX. MM	'J' POCKET LENGTH IN.	'J' POCKET LENGTH MM	'K' POCKET WIDTH IN.	'K' POCKET WIDTH MM	'L' MIN. V-1 IN.	'L' MIN. V-1 MM	'L' MIN. V-100 IN.	'L' MIN. V-100 MM
RKI	1.25	32	1.19	30	2.75	70	3.00	76	1.50	38	9.50	241	1.57	40	1.73	44	.75	19	M16	2.36	60	12.25	311	6.50	165	.59	15	.53	13
RKII	1.25	32	1.12	28	3.25	83	3.50	89	2.00	51	10.75	273	1.73	44	2.20	56	.75	19	M20	3.54	90	12.25	311	8.00	203	.95	24	.82	21
RKIII	1.25	32	1.19	30	4.00	102	4.00	102	2.50	64	13.50	343	2.20	56	2.68	68	.94	24	M24	3.94	100	13.75	349	10.00	254	.99	25	.93	24
RKIV	1.25	32	1.19	30	4.75	121	5.00	127	3.00	76	16.25	413	2.68	68	3.07	78	1.18	30	M30	5.31	135	17.75	451	12.00	305	1.25	32	1.19	30
RKV	1.25	32	.81	21	5.50	140	3.6 MM	6.00 152	3.6 MM	3.50 89	3.6 MM	22.50 572	3.6 MM	3.07 78	3.6 MM	3.94 100	1.42	36	M36	5.91	150	20.50	521	13.00	330	1.75	44	1.31	33
							4.2 MM	7.00 178	4.2 MM	4.00 102	4.2 MM	30.00 762	4.2 MM	3.94 100	4.2 MM	4.92 125			M42	7.87	200								

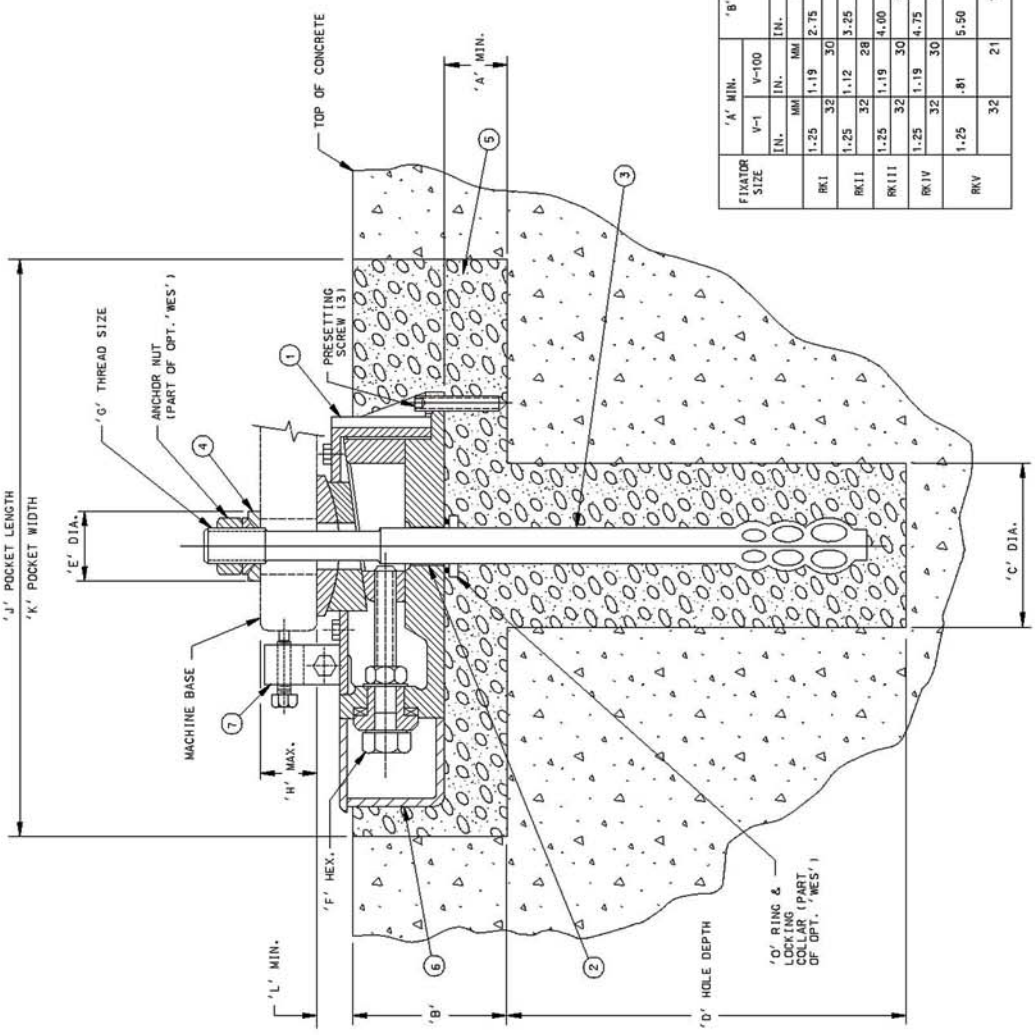

UNISORB®
INSTALLATION TECHNOLOGIES
BOX 1000 • JACKSON, MI 49204-1000
517-764-6060 FAX 517-764-5607

Title STANDARD INSTALLATION DRAWING

MACHINE FIXATOR WITH OPTIONS "WES", "M" AND "D"

COMPANY UNISORB CUSTOMER

REV.	DESCRIPTION	DATE	CHKD.	DR. BY	DATE
4	ADDED METRIC DIMENSIONS	3/11			
3	REVISED 'H' DIMENSIONS	12/08			
2	REVISED HEX. DIMENSIONS	01/03			
1	REVISED DIAMETERS OF V-100 CORE HOLES	6/97	RAH	DG	5/22/98

SCALE NTS DWG. NO. 469900-08 REV 4

STANDARD INSTALLATION DRAWING
RK FIXATOR® WITH OPTION 'WES' ON STEEL PLATE

BILL of MATERIALS

ITEM	QTY	DESCRIPTION
1	1	FIXATOR BASIC UNIT
2	1	OPT. 'F' CLEARANCE HOLE
3	1	OPT. 'B' MACHINED BASE
4	1	OPT. 'WES' ANCHOR/HOLD DOWN STUD
5	1	OPT. 'P' SPHERICAL WASHER SET OPT. 'R' OVERSIZE SPHERICAL WASHER SET
6	A/R	V-1 NON-SHRINK GROUT STANDARD V-100 EPOXY GROUT
7	1	STEEL PLATE. (SEE 'G' & 'H' DIM'S)
8	3	FURNISHED BY UNISORB OR CUSTOMER OPTIONAL LEVELING BOLT. VARIABLE SIZE.
		FURNISHED BY UNISORB OR CUSTOMER

NOTES:

1. SEE UNISORB DRAWING 469900-10A FOR DIMENSIONAL LAYOUT OF STEEL PLATES.

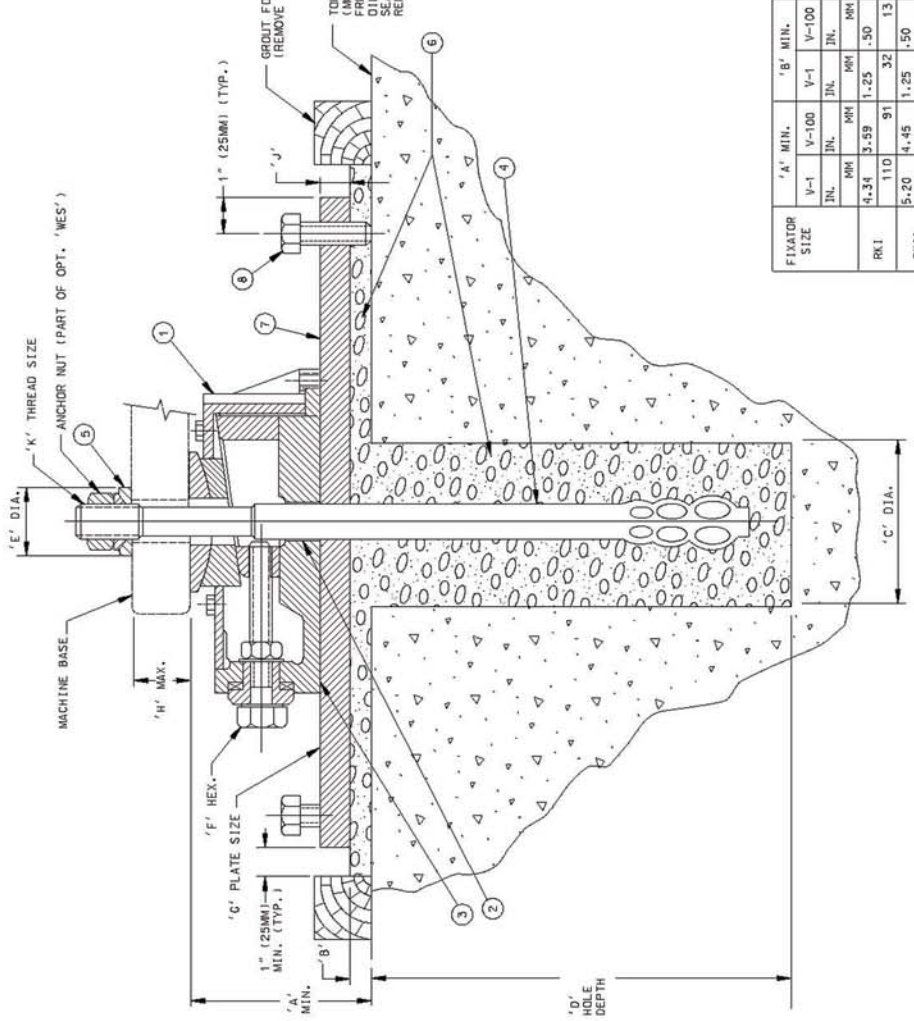

FIXATOR SIZE	'A' MIN. V-1 IN.	'A' MIN. V-1 MM	'A' MIN. V-100 IN.	'A' MIN. V-100 MM	'B' MIN. V-1 IN.	'B' MIN. V-1 MM	'B' MIN. V-100 IN.	'B' MIN. V-100 MM	'C' DIA. V-1 IN.	'C' DIA. V-1 MM	'C' DIA. V-100 IN.	'C' DIA. V-100 MM	'D' HOLE DEPTH IN.	'D' HOLE DEPTH MM	'E' DIA. OPT. 'P' IN.	'E' DIA. OPT. 'P' MM	'E' DIA. OPT. 'R' IN.	'E' DIA. OPT. 'R' MM	'F' HEX. IN.	'F' HEX. MM	'G' IN.	'G' MM	'H' MAX. IN.	'H' MAX. MM	'J' IN.	'J' MM	'K' THREAD SIZE
RKI	4.34	110	3.59	91	1.25	32	.50	13	3.00	76	1.50	38	9.00	229	1.57	40	1.73	44	.75	19	6X9	152X229	2.36	60	1.00	25	M16
RKII	5.20	132	4.45	113	1.25	32	.50	13	3.50	89	2.00	51	10.50	267	1.73	44	2.20	56	.75	19	7X10	178X254	3.54	90	1.00	25	M20
RKIII	5.99	152	5.24	133	1.25	32	.50	13	4.00	102	2.50	64	13.50	343	2.20	56	2.68	68	.94	24	8X12	203X305	3.94	100	1.00	25	M24
RKIV	7.03	179	6.28	160	1.25	32	.50	13	5.00	127	3.00	76	16.25	413	2.68	68	3.07	78	1.18	30	10X15	254X381	5.31	135	1.25	32	M30
RKV	8.06	205	7.31	186	1.25	32	.50	13	6.00 (36 MM)	152	3.50 (36 MM)	89	22.50 (36 MM)	572	3.07 (36 MM)	78	3.94 (36 MM)	100	1.42	36	12X18	305X457	5.91 (36 MM)	150	1.25	32	M36
									7.00 (42 MM)	178	4.00 (42 MM)	102	30.00 (42 MM)	762	3.94 (42 MM)	100	4.92 (42 MM)	125					7.87 (42 MM)	200			M42

REV.	DESCRIPTION	DATE	CHKD.
6	ADDED METRIC DIMENSIONS	3/11	
5	REVISED 'H' DIMENSIONS	12/08	
4	REVISED HEX. DIMENSIONS	01/03	
3	REVISED DIAMETERS OF V-100 CORE HOLES	6/97	
2	REV. 'A' DIM.	7/94	
1	ADDED NOTE #1	8/92	DR. BY DG

UNISORB®
BOX 1000, JACKSON, MI 49204-1000
517-764-6060 FAX 517-764-5607
INSTALLATION TECHNOLOGIES

TITLE STANDARD INSTALLATION DRAWING
MACHINE FIXATOR WITH OPTION "WES" ON STEEL PLATE
COMPANY UNISORB CUSTOMER
SCALE NTS DWG. NO. 469900-10 REV 6
DATE 3/14/91

STANDARD INSTALLATION DRAWING
STEEL PLATES FOR USE WITH RK FIXATORS® AND OPTION 'WES'

BILL of MATERIALS

ITEM	QTY	DESCRIPTION

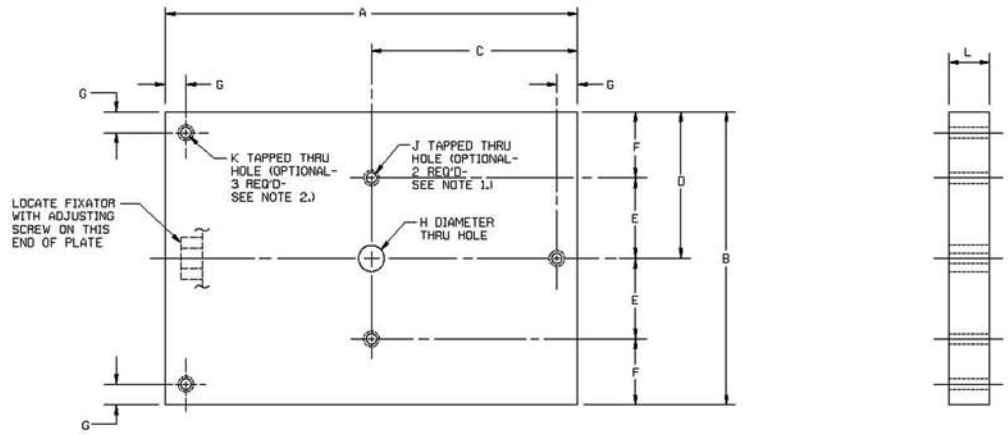

STEEL PLATE

FIXATOR SIZE	A	B	C	D	E	F	G	H	J	K	L
	IN.	IN.	IN.	IN.	IN.	IN.	IN.				IN.
	MM	MM	MM	MM	MM	MM	MM				MM
RKI	9.00	6.00	4.50	3.00	1.81	1.19	.50	16MM	3/8-16	1/4-20	1.00
	229	152	114	76	46	30	13				25
RKII	10.00	7.00	5.00	3.50	2.00	1.50	.50	20MM	3/8-16	1/4-20	1.00
	254	178	127	89	51	38	13				25
RKIII	12.00	8.00	6.00	4.00	2.62	1.38	.50	24MM	1/2-13	1/4-20	1.00
	305	203	152	102	67	35	13				25
RKIV	15.00	10.00	7.50	5.00	3.18	1.82	.50	30MM	3/4-10	1/4-20	1.25
	381	254	191	127	81	46	13				25
RKV	20.00	15.00	10.00	7.50	4.03	3.47	.75	36MM	1-8	3/8-16	1.50
	508	381	254	191	103	88	19				38

NOTES:

1. TAPPED HOLES 'J' WILL ONLY BE REQ'D. WHEN OPT. 'D' LATERAL STABILIZER IS USED.
2. TAPPED HOLES 'K' WILL ONLY BE REQ'D IF CUSTOMER IS GOING TO USE PRE-LEVELING BOLTS.
3. FOR FIXATOR INSTALLATION DRAWING UTILIZING STEEL PLATES SEE UNISORB DRAWING 469900-10.

BOLTS FOR TAPPED HOLES		
FIXATOR SIZE	J (2) HOLES	K (3) HOLES
RKI	3/8-16 X 1.50 LONG HEX. HEAD WITH FLAT WASHER	1/4-20 X 2.00 LONG HEX. HEAD
RKII	3/8-16 X 1.50 LONG HEX. HEAD WITH FLAT WASHER	1/4-20 X 2.00 LONG HEX. HEAD
RKIII	1/2-13 X 1.75 LONG HEX. HEAD WITH FLAT WASHER	1/4-20 X 2.00 LONG HEX. HEAD
RKIV	3/4-10 X 2.25 LONG HEX. HEAD WITH FLAT WASHER	1/4-20 X 2.25 LONG HEX. HEAD
RKV	1-8 X 2.25 LONG HEX. HEAD WITH FLAT WASHER	3/8-16 X 2.50 LONG HEX. HEAD

REV.	DESCRIPTION	DATE
2	ADDED METRIC DIMENSIONS	3/11
1	REV. RKV DIMENSIONS	7/94

UNISORB® INSTALLATION TECHNOLOGIES
BOX 1000, JACKSON, MI 49204-1000
517-764-6060 FAX 517-764-5607

Title	DIMENSIONAL LAYOUT		
MACHINE	STEEL PLATES FOR USE WITH FIXATORS & OPT. "WES"		
COMPANY	UNISORB CUSTOMER		
DR. BY DG	SCALE NTS	DWG. NO. 469900-10A	REV 2
CHKD. RAH	DATE 5/11/92		

STANDARD INSTALLATION DRAWING
RK FIXATOR® WITH OPTIONS 'STE' AND 'M'

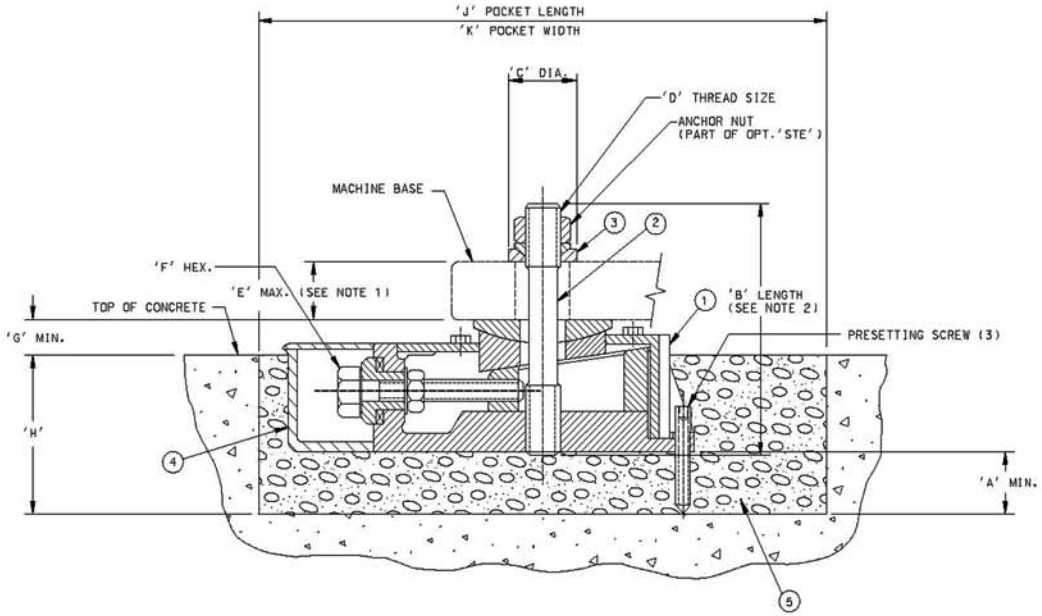

BILL of MATERIALS

ITEM	QTY	DESCRIPTION
1	1	FIXATOR BASIC UNIT
2	1	OPT. 'STE' HOLD DOWN STUD
3	1	OPT. 'P' SPHERICAL WASHER SET
		OPT. 'R' OVERSIZE SPHERICAL WASHER SET
4	1	OPT. 'M' ADJUSTMENT BOLT ENCLOSURE
5	A/R	V-1 NON-SHRINK GROUT
		STANDARD V-100 EPOXY GROUT

NOTES:

1. DIMENSION SHOWN IS FOR STANDARD LENGTH OPT. 'STE'. LONGER STUDS ARE AVAILABLE FOR SPECIAL APPLICATIONS WHERE MACHINE FOOT THICKNESS DICTATES.
2. DIMENSION SHOWN IS WHEN USING STANDARD LENGTH OPT. 'STE'.

FIXATOR SIZE	'A' MIN. V-1	'A' MIN. V-100	'B' LENGTH	'C' DIA. OPT. 'P'	'C' DIA. OPT. 'R'	'D' THREAD SIZE	'E' MAX.	'F' HEX.	'G' MIN. V-1	'G' MIN. V-100	'H'	'J' POCKET LENGTH	'K' POCKET WIDTH
	IN.	IN.	IN.	IN.	IN.		IN.	IN.	IN.	IN.	IN.	IN.	IN.
	MM	MM	MM	MM	MM		MM	MM	MM	MM	MM	MM	MM
RKI	—	—	—	—	—	—	—	—	—	—	—	—	—
RKII	1.25	1.12	6.69	1.73	2.20	M20	2.17	.75	.95	.82	3.25	12.25	8.00
	32	28	170	44	56		55	19	24	21	83	311	203
RKIII	1.25	1.19	8.46	2.20	2.68	M24	2.76	.94	.99	.93	4.00	13.75	10.00
	32	30	215	56	68		70	24	25	24	102	349	254
RKIV	1.25	1.19	10.24	2.68	3.07	M30	3.35	1.18	1.25	1.19	4.75	17.75	12.00
	32	30	260	68	78		85	30	32	30	121	451	305
RKV	1.25	.81	12.20	3.07	3.94	M36	4.13	1.42	1.75	1.31	5.50	20.50	13.00
	32	21	310	78	100		105	36	44	33	140	521	330

REV.	DESCRIPTION	DATE
2	ADDED METRIC DIMENSIONS	3/11
1	REVISED HEX. DIMENSIONS	01/03

UNISORB®
INSTALLATION TECHNOLOGIES
BOX 1000, JACKSON, MI 49204-1000
517-764-6060 FAX 517-764-5607

Title: STANDARD INSTALLATION DRAWING
MACHINE: FIXATOR WITH OPTIONS "STE" AND "M"
COMPANY: UNISORB CUSTOMER
DR. BY DG | SCALE NTS | DWG. NO. 469900-12 | REV 2
CHKD. RAH | DATE 3/14/91

STANDARD INSTALLATION DRAWING
RK FIXATOR® WITH OPTIONS 'STE', 'M' AND 'D'

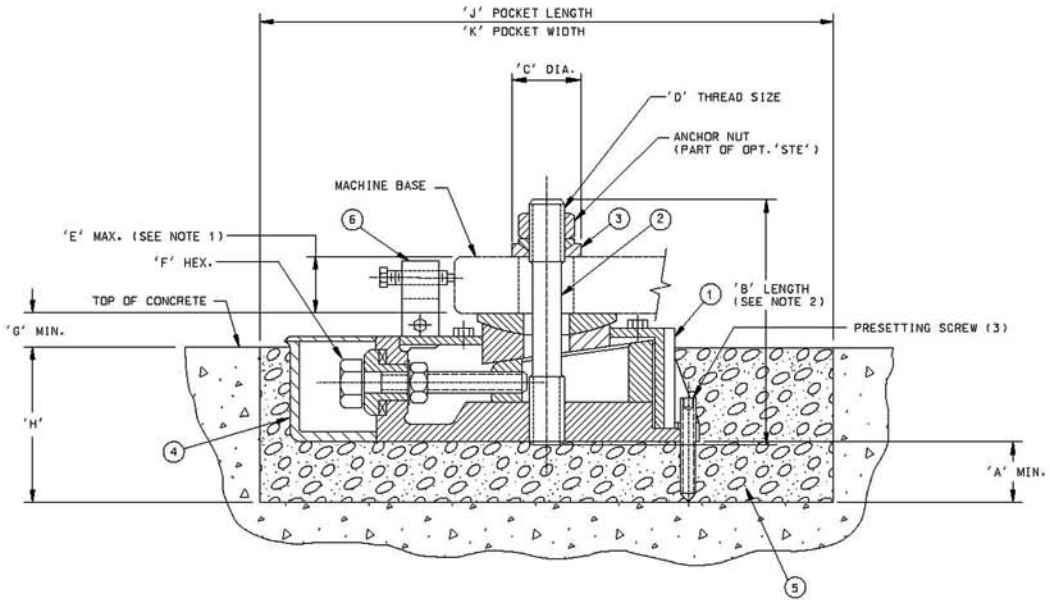

BILL of MATERIALS

ITEM	QTY	DESCRIPTION
1	1	FIXATOR BASIC UNIT
2	1	OPT. 'STE' HOLD DOWN STUD
3	1	OPT. 'P' SPHERICAL WASHER SET
		OPT. 'R' OVERSIZE SPHERICAL WASHER SET
4	1	OPT. 'M' ADJUSTMENT BOLT ENCLOSURE
5	A/R	V-1 NON-SHRINK GROUT
		STANDARD V-100 EPOXY GROUT
6	1	OPT. 'D' LATERAL STABILIZER

NOTES:

1. DIMENSION SHOWN IS FOR STANDARD LENGTH OPT. 'STE'. LONGER STUDS ARE AVAILABLE FOR SPECIAL APPLICATIONS WHERE MACHINE FOOT THICKNESS DICTATES.
2. DIMENSION SHOWN IS WHEN USING STANDARD LENGTH OPT. 'STE'.

FIXATOR SIZE	'A' MIN. V-1	'A' MIN. V-100	'B' LENGTH	'C' DIA. OPT. 'P'	'C' DIA. OPT. 'R'	'D' THREAD SIZE	'E' MAX.	'F' HEX.	'G' MIN. V-1	'G' MIN. V-100	'H'	'J' POCKET LENGTH	'K' POCKET WIDTH
	IN.	IN.	IN.	IN.	IN.		IN.	IN.	IN.	IN.	IN.	IN.	IN.
	MM	MM	MM	MM	MM		MM	MM	MM	MM	MM	MM	MM
RKI	—	—	—	—	—	—	—	—	—	—	—	—	—
RKII	1.25	1.12	6.69	1.73	2.20	M20	2.17	.75	.95	.82	3.25	12.25	8.00
	32	28	170	44	56		55	19	24	21	83	311	203
RKIII	1.25	1.19	8.46	2.20	2.68	M24	2.76	.94	.99	.93	4.00	13.75	10.00
	32	30	215	56	68		70	24	25	24	102	349	254
RKIV	1.25	1.19	10.24	2.68	3.07	M30	3.35	1.18	1.25	1.19	4.75	17.75	12.00
	32	30	260	68	78		85	30	32	30	121	451	305
RKV	1.25	.81	12.20	3.07	3.94	M36	4.13	1.42	1.75	1.31	5.50	20.50	13.00
	32	21	310	78	100		105	36	44	33	140	521	330

REV.	DESCRIPTION	DATE
2	ADDED METRIC DIMENSIONS	3/11
1	REVISED HEX. DIMENSIONS	01/03

UNISORB®
INSTALLATION TECHNOLOGIES
BOX 1000, JACKSON, MI 49204-1000
517-764-6060 FAX 517-764-5607

Title: STANDARD INSTALLATION DRAWING
MACHINE: FIXATOR WITH OPTIONS "STE", "M" & "D"
COMPANY: UNISORB CUSTOMER

DR. BY DG | SCALE NTS | DWG. NO. 469900-14 | REV 2
CHKD. RAH | DATE 3/14/91

STANDARD INSTALLATION DRAWING
RK FIXATOR® WITH OPTIONS 'WES','C' AND 'D'

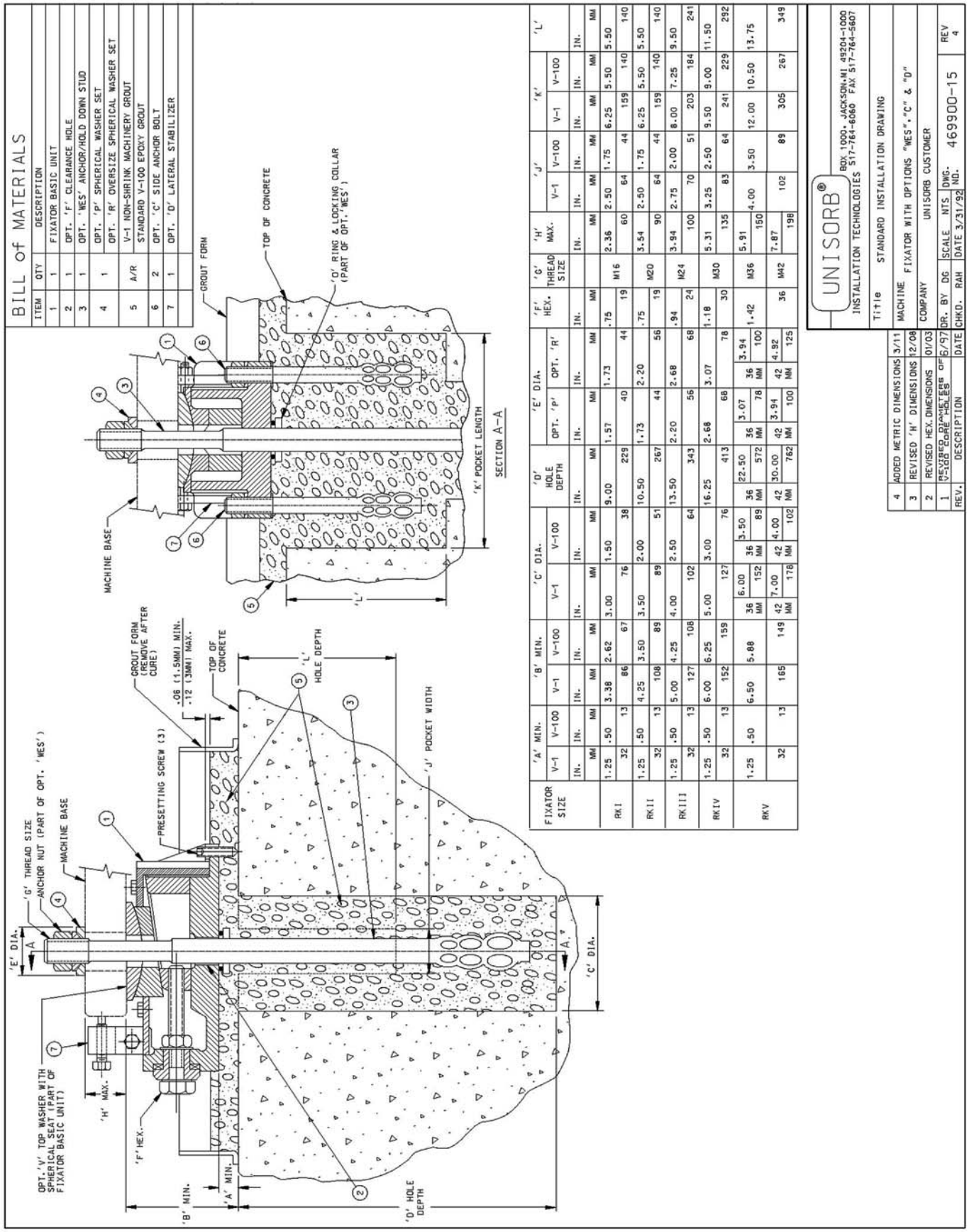

FIXATOR SIZE	'A' MIN. V-1 IN.	'A' MIN. V-100 IN.	'A' MIN. V-1 MM	'A' MIN. V-100 MM	'B' MIN. V-1 IN.	'B' MIN. V-100 IN.	'B' MIN. V-1 MM	'B' MIN. V-100 MM	'C' DIA. V-1 IN.	'C' DIA. V-100 IN.	'C' DIA. V-1 MM	'C' DIA. V-100 MM	'D' HOLE DEPTH IN.	'D' HOLE DEPTH MM	'E' DIA. OPT. 'P' IN.	'E' DIA. OPT. 'P' MM	'E' DIA. OPT. 'R' IN.	'E' DIA. OPT. 'R' MM	'F' HEX. IN.	'F' HEX. MM	'G' THREAD SIZE	'H' MAX. IN.	'H' MAX. MM	'J' V-1 IN.	'J' V-100 IN.	'J' V-1 MM	'J' V-100 MM	'K' V-1 IN.	'K' V-100 IN.	'K' V-1 MM	'K' V-100 MM	'L' IN.	'L' MM
RKI	1.25	.50	32	13	3.38	2.62	86	67	3.00	1.50	76	38	9.00	229	1.57	40	1.73	44	.75	19	M16	2.36	60	2.50	1.75	64	44	6.25	159	5.50	140	5.50	140
RKII	1.25	.50	32	13	4.25	3.50	108	89	3.50	2.00	89	51	10.50	267	1.73	44	2.20	56	.75	19	M20	3.54	90	2.50	1.75	64	44	6.25	159	5.50	140	5.50	140
RKIII	1.25	.50	32	13	5.00	4.25	127	108	4.00	2.50	102	64	13.50	343	2.20	56	2.68	68	.94	24	M24	3.94	100	2.75	2.00	70	51	8.00	203	7.25	184	9.50	241
RKIV	1.25	.50	32	13	6.00	6.25	152	159	5.00	3.00	127	76	16.25	413	2.68	68	3.07	78	1.18	30	M30	5.31	135	3.25	2.50	83	64	9.50	241	9.00	229	11.50	292
RKV	1.25	.50	32	13	6.50	5.88	165	149	6.00	3.50	152	89	22.50	572	3.07	78	3.94	100	1.42	36	M36	5.91	150	4.00	3.50	100	89	12.00	305	10.50	267	13.75	349
									7.00	4.00	178	102	30.00	762	3.94	100	4.92	125			M42	7.87	198										

STANDARD INSTALLATION DRAWING
RK FIXATOR® WITH OPTION 'STE' ON STEEL PLATE
USED WITH STEEL BASEPLATES AND IB-500-B1 PADS

BILL of MATERIALS

ITEM	QTY	DESCRIPTION
1	1	FIXATOR BASIC UNIT
2	1	OPT. 'F' CLEARANCE HOLE
3	1	OPT. 'B' MACHINED BASE
4	1	OPT. 'STE' HOLD DOWN STUD
5	1	OPT. 'P' SPHERICAL WASHER SET
		OPT. 'R' OVERSIZE SPHERICAL WASHER SET
6	1	STEEL PLATE. (SEE 'G' & 'H' DIM'S)
		FURNISHED BY UNISORB OR CUSTOMER
7	1	STEEL BASEPLATE (BY CUSTOMER)
8	A/R	IB-500-B1 BASE ISOL. MAT'L (DOUBLE THICK)
		(LAYOUT DEPENDS ON APPLICATION)

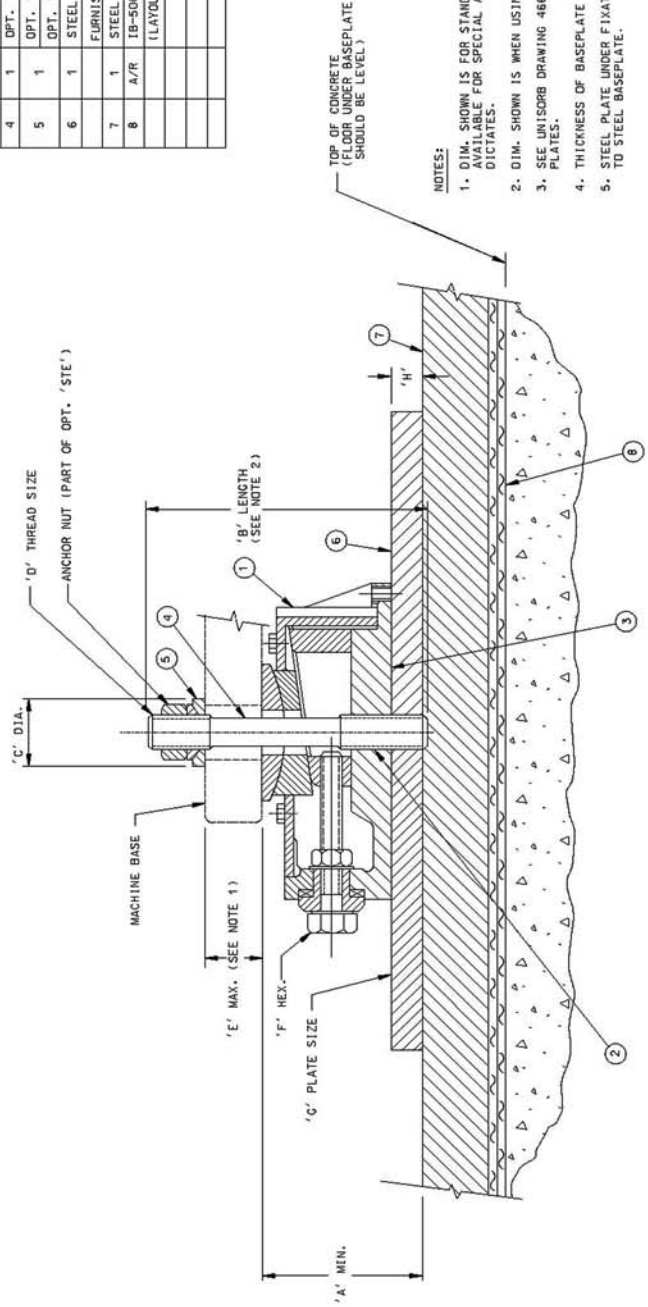

NOTES:

1. DIM. SHOWN IS FOR STANDARD LENGTH OPT. 'STE'. LONGER STUDS ARE AVAILABLE FOR SPECIAL APPLICATIONS WHERE MACHINE FOOT THICKNESS DICTATES.
2. DIM. SHOWN IS WHEN USING STANDARD LENGTH OPT. 'STE'.
3. SEE UNISORB DRAWING 466900-03A FOR DIMENSIONAL LAYOUT OF STEEL PLATES.
4. THICKNESS OF BASEPLATE VARIES DEPENDING ON APPLICATION.
5. STEEL PLATE UNDER FIXATOR MAY BE EITHER BOLTED OR WELDED TO STEEL BASEPLATE.

FIXATOR SIZE	'A' MIN.	'B' LENGTH	'C' DIA. OPT. 'P'	'C' DIA. OPT. 'R'	'D' THREAD SIZE	'E' MAX.	'F' HEX.	'G' PLATE SIZE	'H'
	IN. / MM	IN. / MM	IN. / MM	IN. / MM		IN. / MM	IN. / MM	IN. / MM	IN. / MM
RKI	3.09 / 79	6.69 / 170	1.73 / 44	2.20 / 56	M16	2.09 / 53	.75 / 19	6X9 / 152X229	1.00 / 25
RKII	3.95 / 100	6.69 / 170	1.73 / 44	2.20 / 56	M20	1.17 / 30	.75 / 19	7X10 / 178X254	1.00 / 25
RKIII	4.74 / 120	8.46 / 215	2.20 / 56	2.68 / 68	M24	1.76 / 45	.94 / 24	8X12 / 203X305	1.00 / 25
RKIV	5.78 / 147	10.24 / 260	2.68 / 68	3.07 / 78	M30	2.10 / 53	1.18 / 30	10X15 / 254X381	1.25 / 32
RKV	6.81 / 173	12.20 / 310	3.07 / 78	3.94 / 100	M36	2.63 / 67	1.42 / 36	15X20 / 381X508	1.50 / 38

UNISORB®
INSTALLATION TECHNOLOGIES
BOX 1000, JACKSON, MI 49204-1000
517-764-6060 FAX 517-764-5607

Title STANDARD INSTALLATION DRAWING

MACHINE RK FIXATOR WITH OPT. 'STE' ON STEEL PLATE, USED WITH STEEL BASEPLATES AND IB-500-B1 PADS

COMPANY UNISORB CUSTOMER

SCALE NTS | DWG. NO. 469900-17 | REV 3

DATE 3/31/92 | CHKD. RAH | DR. BY DG | DATE 7/97

REV.	DESCRIPTION	DATE
1	REVISED PICTURE OF ITEM 8	7/97
2	REVISED HEX. DIMENSIONS	01/03
3	ADDED METRIC DIMENSIONS	3/11

SUGGESTED GROUT QUANTITIES

Cubic Ft. of Grout Per Fixator

GROUT TYPE	FIXATOR MODEL NO.	OPTIONS						
		BASIC UNIT	WES*	C*	WES & C *	LE*	M	LES
V-1	RKI 9" (229mm) Square Grout Form	.11	.15	—	.19	.12	.13	0.16
V-100		.05	.06	—	.10	.06		**.02
V-1	RKII 11" (279mm) Square Grout Form	.16	.22	.20	.26	.17	.18	0.22
V-100		.07	.09	.12	.14	.08		**.02
V-1	RKIII 11" (279mm) Square Grout Form	.16	.26	.28	.38	.17	.35	0.39
V-100		.07	.11	.19	.23	.08		**.03
V-1	RKIV 12" X 15" (305 X 381mm) Grout Form	.23	.41	.44	.62	.24	.59	0.71
V-100		.10	.15	.31	.36	.11		**.05
V-1	RKV 12" X 15" (305 X 381mm) Grout Form	.23	36mm = .60 42mm = .90	.61	.98 1.28	.24	.90	1.04
V-100		.10	36mm = .23 42mm = .32	.48	.61 .70	.11		**.06

Yields for Grout:			
	V-1	48# Bag	= .40 cu. ft. (.011 cu. M)
	V-100	11# Kit	= .10 cu. ft. (.003 cu. M)
		22# Kit	= .21 cu. ft. (.006 cu. M)
		55# Kit	= .53 cu. ft. (.015 cu. M)

* Includes Basic Unit grout (above concrete).

** Add this amount per inch in specified length of Option LES.

NOTES:

1. V-1 Grout for Basic Unit (above concrete) is figured @ 2-1/4" (57mm) thick.
2. V-100 Grout for Basic Unit (above concrete) is figured @ 1" (25mm) thick.
3. Options M & LES refer to either V-1 or V-100 (no grout above surface of concrete).
4. Option LES includes grout quantity for Option M.

MS FIXATOR DESCRIPTION

MODEL MS FIXATOR

The Model MS Fixator is designed for vertical and lateral alignment and anchoring of electric motors, pumps, compressors, cooling apparatus and many other applications.

The MS Fixator comes in five sizes: MSIa40, MSIIa60, MSIIa80, MSIIIa110, and MSIIIa150 as shown in the chart on the next page. It has two lateral adjusters providing positive horizontal positioning. Vertical alignment is accomplished from the top with a threaded element. To ensure positive support the bearing plate incorporates a spherical seat.

Normally the Model MS Fixator will be fastened to the steel base frames of such machines as described above. It can also be adapted to concrete pedestal installations. Contact Unisorb for details.

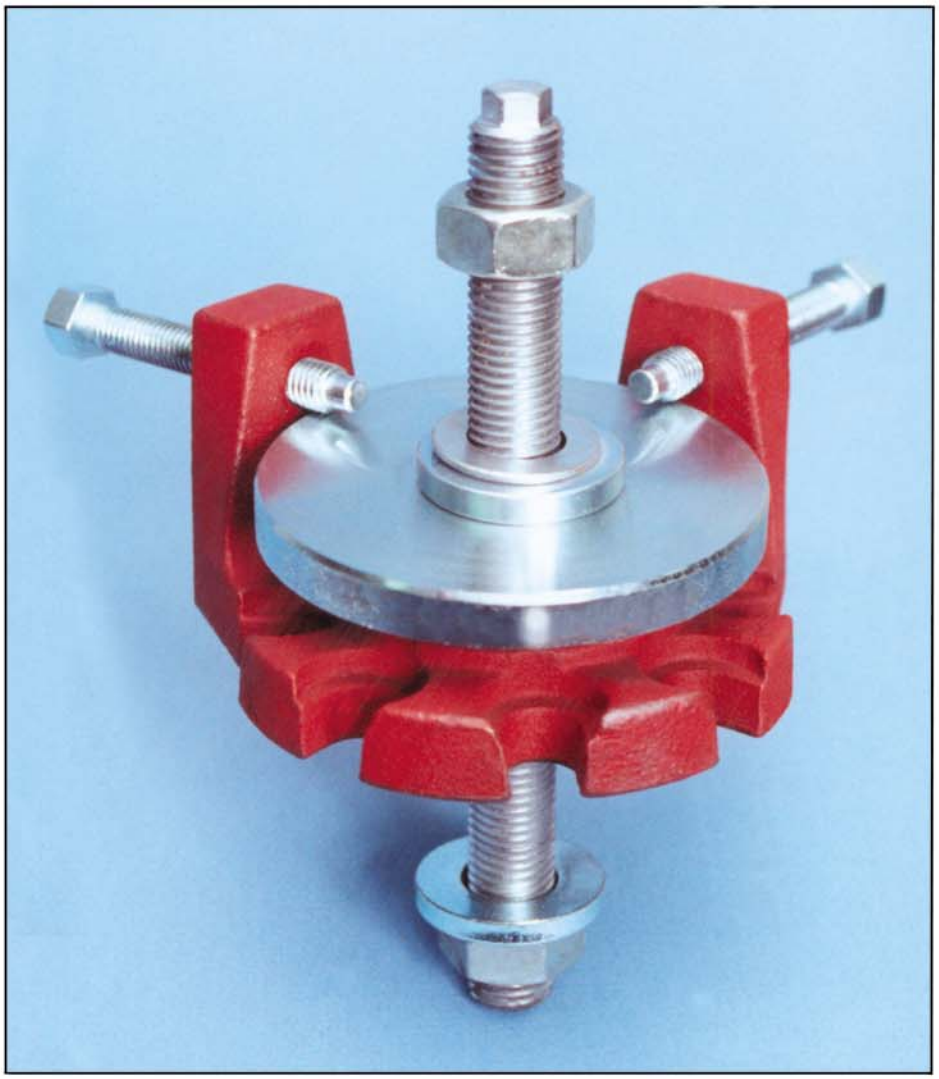

ALIGNMENT PROCEDURES

1. Lower the motor or machine onto the MS Fixator.
2. Align first in the vertical direction (without tightening nuts at the leveling bolt.)
3. Tighten the lower nut on the anchor bolt or stud against the base frame.
4. Align the machine in the lateral direction.
5. Tighten the upper nut to secure the motor or machine.
6. Check the alignment.

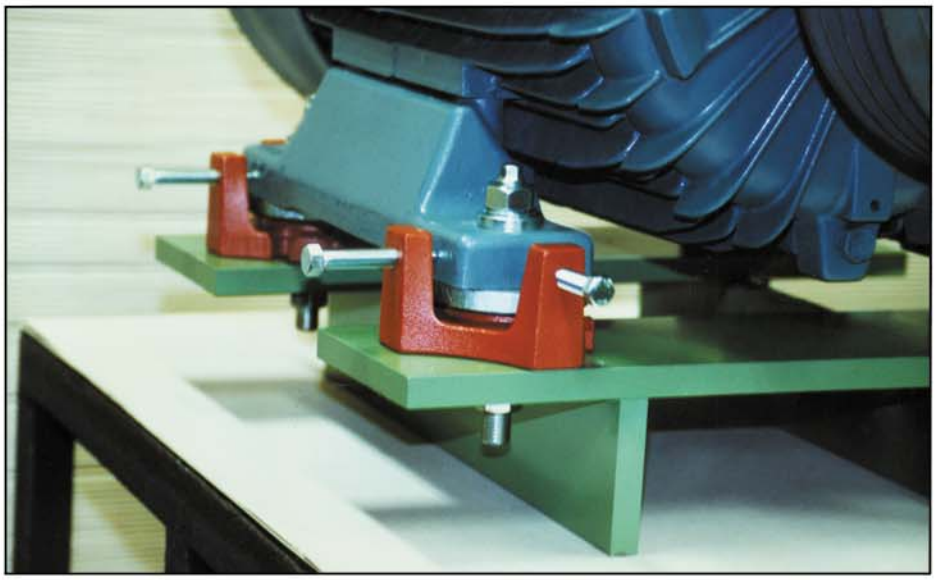

MS FIXATOR® DIMENSIONS

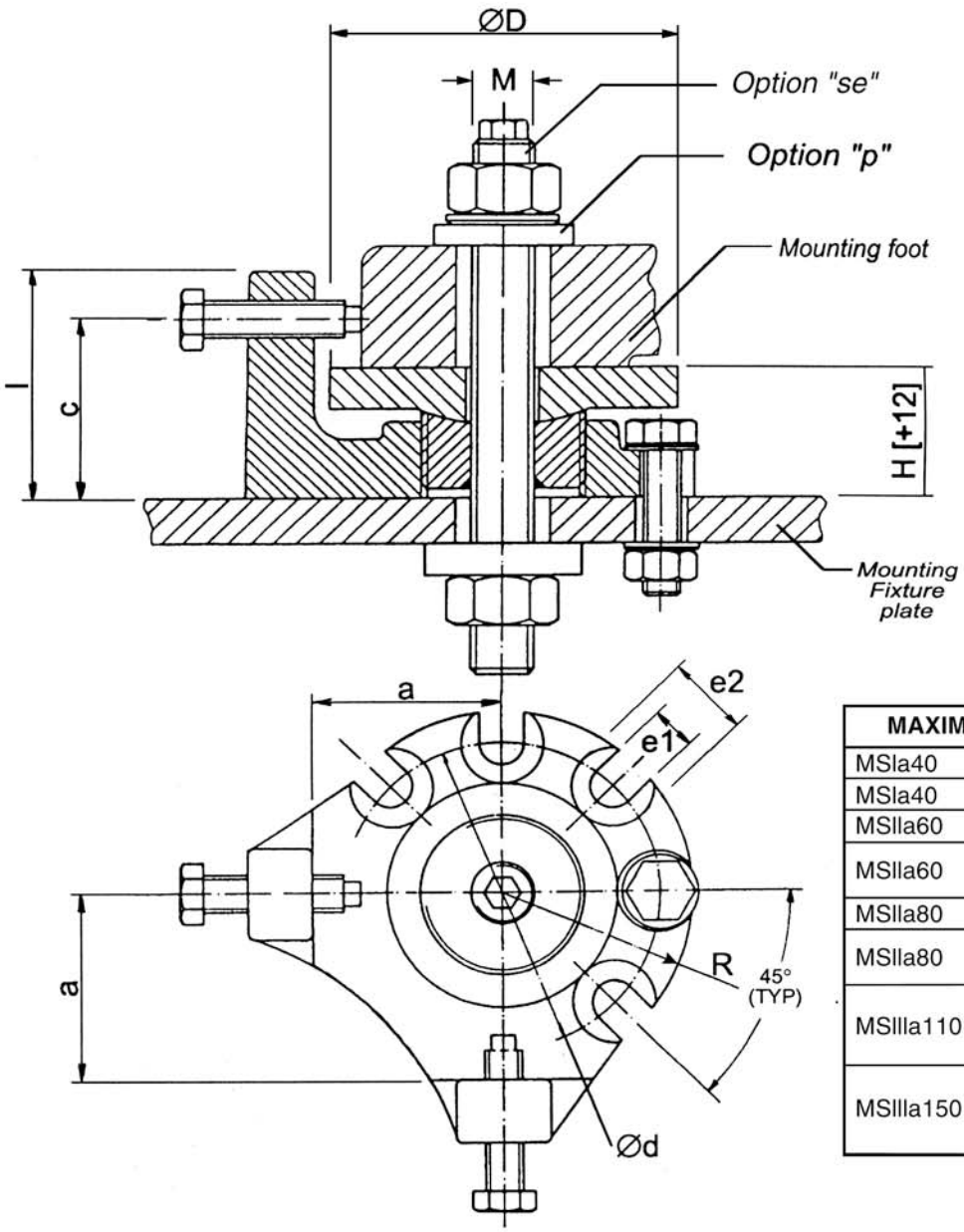

MAXIMUM LEVELING LOAD		
MSIa40	w/16mm Bolt	4500 lbs.(2045 kg.)
MSIa40	w/20mm Bolt	6900 lbs.(3136 kg.)
MSIIa60	w/16mm Bolt	4500 lbs.(2045 kg.)
MSIIa60	w/20mm Bolt w/24mm Bolt	6900 lbs.(3136 kg.)
MSIIa80	w/16mm Bolt	4500 lbs.(2045 kg.)
MSIIa80	w/20mm Bolt w/24mm Bolt	6900 lbs.(3136 kg.)
MSIIIa110	w/24mm Bolt w/30mm Bolt w/36mm Bolt	9000 lbs.(4091 kg.)
MSIIIa150	w/24mm Bolt w/30mm Bolt w/36mm Bolt	9000 lbs.(4091 kg.)

MS		a	ØD	H	M			l	c	Ød	R	e1	e2
Ia40	mm	40	70	40	12	16	20	68	56	85	50	12	23
	in.	1.58	2.76	1.58	.47	.63	.79	2.68	2.20	3.35	1.97	.47	.91
IIa60	mm	60	110	40	16	20	24	75	58	100	60	14	26
	in.	2.36	4.33	1.58	.63	.79	.94	2.95	2.28	3.94	2.36	.55	1.02
IIa80	mm	80	150	40	16	20	24	75	58	100	60	14	26
	in.	3.15	5.91	1.58	.63	.79	.94	2.95	2.28	3.94	2.36	.55	1.02
IIIa110	mm	110	210	50	24	30	36	85	70	140	80	18	32
	in.	4.33	8.27	1.97	.94	1.18	1.42	3.35	2.76	5.51	3.15	.71	1.26
IIIa150	mm	150	210	50	24	30	36	85	70	140	80	18	32
	in.	5.91	8.27	1.97	.94	1.18	1.42	3.35	2.76	5.51	3.15	.71	1.26

S FIXATOR® DESCRIPTION

The Model S Fixator is designed to complement the Model RK system. The Model S fearutes a vertical bolt type adjustment and is used particularly in cases when leveling adjustment must be done from above where the Model RK cannot be used. Specific applications include floor plates, layout tables and similar situations.

The unit is comprised of a high density cast iron housing equipped with a captive mounted free turning adjusting and hold-down bolt combination. This high tensile bolt has at its lower half a spline shaped body structure. The upper end has a rolled thread to accept the hold-down nut, with a hex. head end for height adjustment.

The spline end section of the adjusting bolt engages with a precision matching spline pattern in the adjusting sleeve that is threaded into the base of the housing. The adjusting sleeve is guided by the upper portion of the housing to prevent lateral movement. A support plate with a precision machined concave surface mates with the convex spherical surface of the adjusting sleeve to assure equal load distribution over the entire bearing surface and compensate for any angular difference between machine and Fixator.

An additional spherical washer set (option p) may be provided to compensate for any angular differences on the top surface of the machine bed.

The adjusting mechanism is totally enclosed and all machined surfaces have been treated with a high-pressure lubricant to reduce friction and prevent corrosion.

The Model S Fixator may be completely embedded into the foundation as shown on page 44.

In addition, this unit is equipped with three auxiliary leveling screws to rough level the base prior to pouring grout. When the unit is mounted on the top of a foundation, two side located anchor bolts (option c) secure the leveler to the foundation using the grouting method shown on page 44.

The leveling is accomplished by the following sequence: After securing the Model S Fixator to the machine and foundation the upper hold-down nut is loosened and the adjustment accomplished by turning the adjusting bolt at its hex. head, thus causing vertical leveling through the movement of the inner adjustment sleeve. After the leveling is completed, the hold-down nut is tightened, acting as a jam nut to prevent creeping of the inner adjusting sleeve due to vibration. See page 46 of this publication for complete installation instructions.

As an additional feature, option d cover plates are available in several outside diameters to cover and seal the access openings usually provided to accommodate the hold-down/adjusting bolt and nut mechanism, for the adjusting of the Fixator.

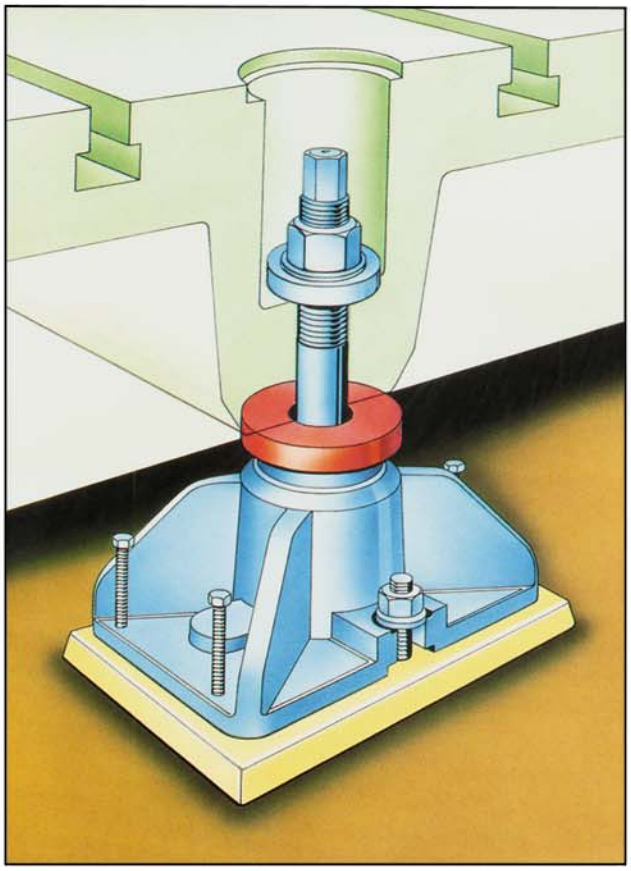

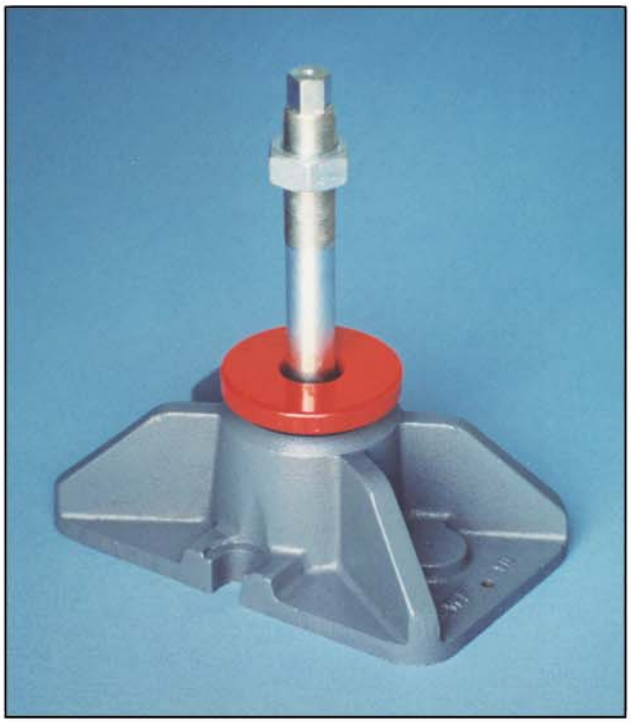

S FIXATOR® DIMENSIONS

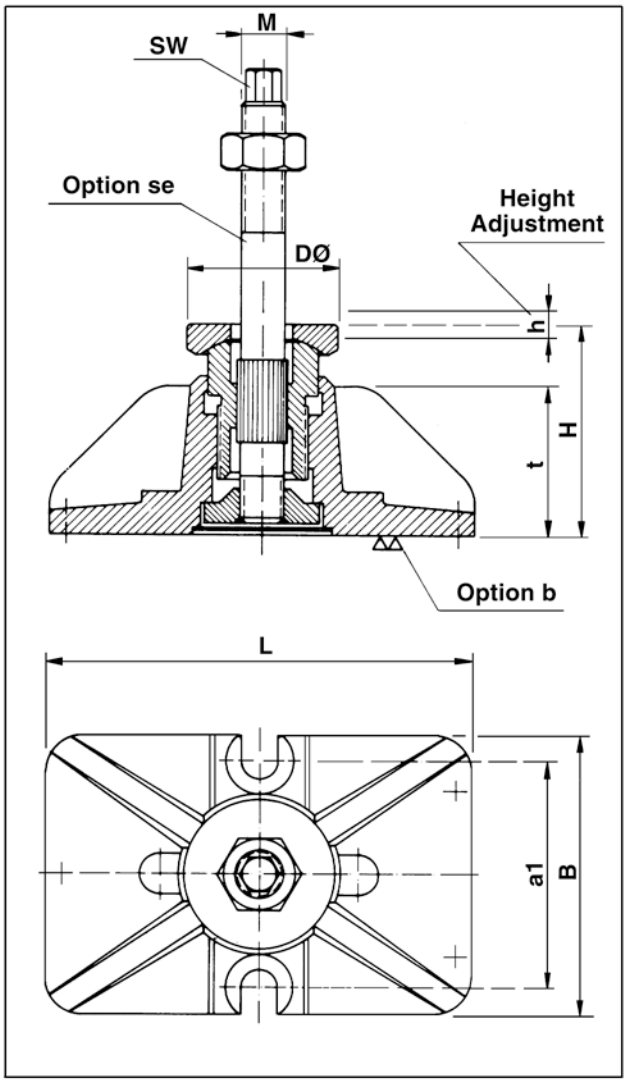

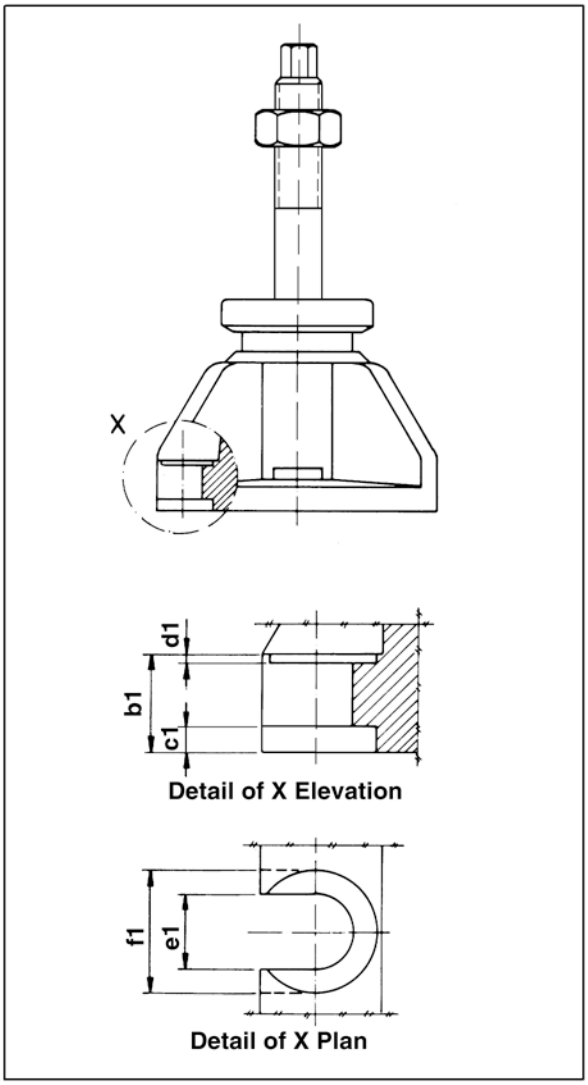

DIMENSIONS															
SIZE S	M	L		B		H		DØ		SW		t		h	
		in.	mm	in.	mm	in.	mm	in.	mm	in.	mm	in.	mm	in.	mm
I	M16	6.61	168	4.13	105	3.15	80	2.24	57	.47	12	2.36	60	.32	8
II	M20	7.48	190	4.53	115	3.74	95	2.76	70	.59	15	2.68	68	.39	10
III	M24	8.66	220	5.51	140	4.45	113	3.23	82	.75	19	3.27	83	.47	12
IV	M30	11.02	280	7.28	185	5.51	140	3.94	100	.95	24	3.82	97	.63	16
V	M36	12.99	330	8.86	225	6.54	166	4.80	122	1.18	30	4.72	120	.79	20

SIZE S	a1		b1		c1		d1		e1		f1	
	in.	mm	in.	mm	in.	mm	in.	mm	in.	mm	in.	mm
I	3.47	88	.63	16	.16	4	—	—	.47	12	.87	22
II	3.94	100	.79	20	.20	5	.08	2	.55	14	1.02	26
III	4.72	120	.98	25	.24	6	.08	2	.71	18	1.26	32
IV	5.91	150	1.26	32	.32	8	.08	2	.95	24	1.50	38
V	7.09	180	1.50	38	.32	8	.08	2	1.10	28	1.81	46

S FIXATOR® TECHNICAL SPECIFICATIONS

ENGLISH

DESCRIPTION		DIM.	SI	SII	SIII	SIV	SV
Recomended machine dead weight per Fixator® *		Lbs.	2,200	4,400	8,800	13,000	22,000
Maximum allowable load per Fixator® **		Lbs.	19,800	26,400	52,800	79,200	132,000
Spring Constant		Lbs./In.	8,550,000	11,400,000	14,250,000	17,100,000	22,800,000
Approximate Torque Required To Turn Adjusting Screw		Ft. Lbs. / 1000 Lbs.	12	15	17	20	23
Maximum Allowable Torque On Adjusting Screw		Ft. Lbs.	90	175	350	700	1,500
Maximum Torque at the Hold Down Nut		Ft. Lbs.	45	88	176	350	700
Weight of Basic Unit		Lbs.	7.2	11.2	18.5	33.7	60.7
Maximum Tension On Anchor Bolt	Option se	Lbs.	11,650	17,820	25,300	40,040	58,300
	Option c	Lbs.	9,900	14,300	26,400	41,800	60,500

Vertical Adjustment per Screw turn: .079 inches for all sizes.

METRIC

DESCRIPTION		DIM.	SI	SII	SIII	SIV	SV
Recomended machine dead weight per Fixator® *		N	10,000	20,000	40,000	60,000	100,000
Maximum allowable load per Fixator® **		N	90,000	120,000	240,000	360,000	600,000
Spring Constant		N/µm	1,500	2,000	2,500	3,000	4,000
Approximate Torque Required To Turn Adjusting Screw		$N{\cdot}m/10^3kg$	35	45	50	60	70
Maximum Allowable Torque On Adjusting Screw		N·m	120	240	480	960	2,050
Maximum Torque at the Hold Down Nut		N·m	60	120	240	480	960
Weight of Basic Unit		kg	3.25	5.10	8.40	15.30	27.60
Maximum Tension On Anchor Bolt	Option se	N	52,955	81,000	115,000	182,000	265,000
	Option c	N	45,000	65,000	120,000	190,000	275,000

Vertical Adjustment per Screw turn: 2mm for all sizes.

***Standard approach for determination of Fixator® size.**

****Maximum allowable is the total of the following.**

a) Proportional Machine Load.

b) Tensile Force Exerted by Anchor Bolt.

c) Dynamic (Acceleration) Forces.

d) Changing Loads (moving machine parts or workpieces).

Options	The basic design can be modified by the following versions to adapt it to any type of machine or building construction feature.
b 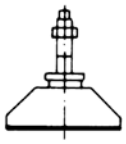	Base surface of S FIXATORS® machined.
se 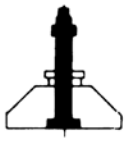	High tensile hold-down and adjusting bolt.
p 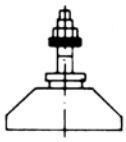	Spherical washer set.
r	Oversized spherical washer set.
v 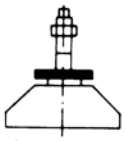	Enlarged spherical support washer.
c	Two side anchor bolts for securing the S FIXATORS® to the foundation.
sew	Center anchor hold-down stud.
d	Access opening cover.

S FIXATOR® DETAILED OPTION SPECIFICATIONS
NON-ANCHORED INSTALLATION

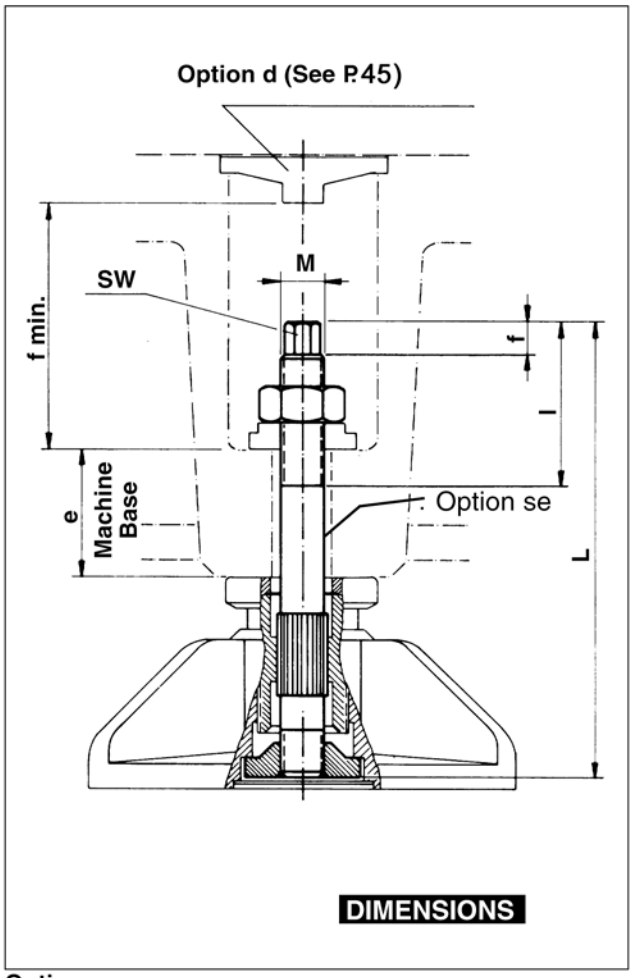

Option se

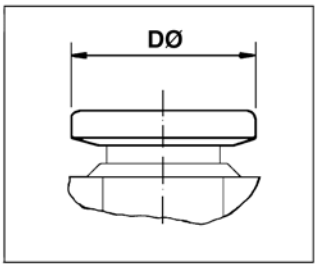

Option v

DIMENSIONS		
SIZE S	DØ	
	in.	mm
I	2.24	57
II	2.76	70
III	3.23	82
IV	3.94	100
V	4.80	122

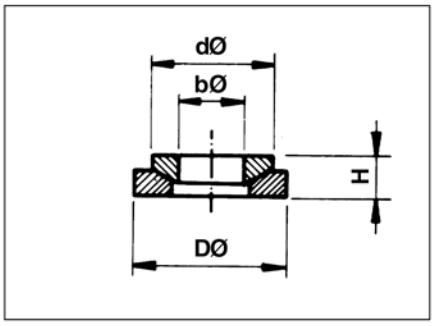

Option r

DIMENSIONS								
SIZE S	DØ		H		dØ		bØ	
	in.	mm	in.	mm	in.	mm	in.	mm
I	1.73	44	.39	10	1.42	36	.67	17
II	2.20	56	.51	13	1.73	44	.83	21
III	2.68	68	.63	16	2.21	56	.98	25
IV	3.07	78	.79	20	2.68	68	1.22	31
V	3.94	100	.79	20	2.68	68	1.46	37

SIZE S	M	l		SW		t		f		L		e from		e to		L		e from		e to	
		in.	mm	in.	mm	in.	mm	in.	mm	in.	mm	in.	mm	in.	mm	in.	mm	in.	mm	in.	mm
I	M16	2.56	65	.47	12	.47	12	3.15	80	6.69	170	.79	20	1.58	40	7.48	190	1.58	40	2.36	60
II	M20	2.95	75	.89	23	.59	15	3.54	90	7.28	185	.79	20	1.58	40	8.07	205	1.58	40	2.36	60
III	M24	3.54	90	.75	19	.75	19	4.13	105	9.65	245	1.38	35	2.36	60	10.43	265	2.36	60	3.15	80
IV	M30	4.33	110	.95	24	.95	24	4.92	125	12.21	310	2.36	60	3.54	90	—	—	—	—	—	—
V	M36	5.12	130	1.18	30	1.18	30	6.30	160	14.96	380	2.76	70	4.33	110	—	—	—	—	—	—

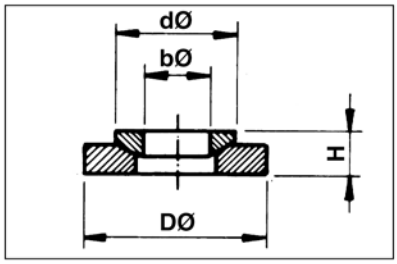

Option p

DIMENSIONS								
SIZE S	DØ		H		dØ		bØ	
	in.	mm	in.	mm	in.	mm	in.	mm
I	1.58	40	.35	9	1.18	30	.67	17
II	1.73	44	.39	10	1.42	36	.83	21
III	2.21	56	.51	13	1.73	44	.98	25
IV	2.68	68	.63	16	2.21	56	1.22	31
V	3.07	78	.79	20	2.68	68	1.46	37

S FIXATOR® DETAILED OPTION SPECIFICATIONS
ANCHORED INSTALLATION

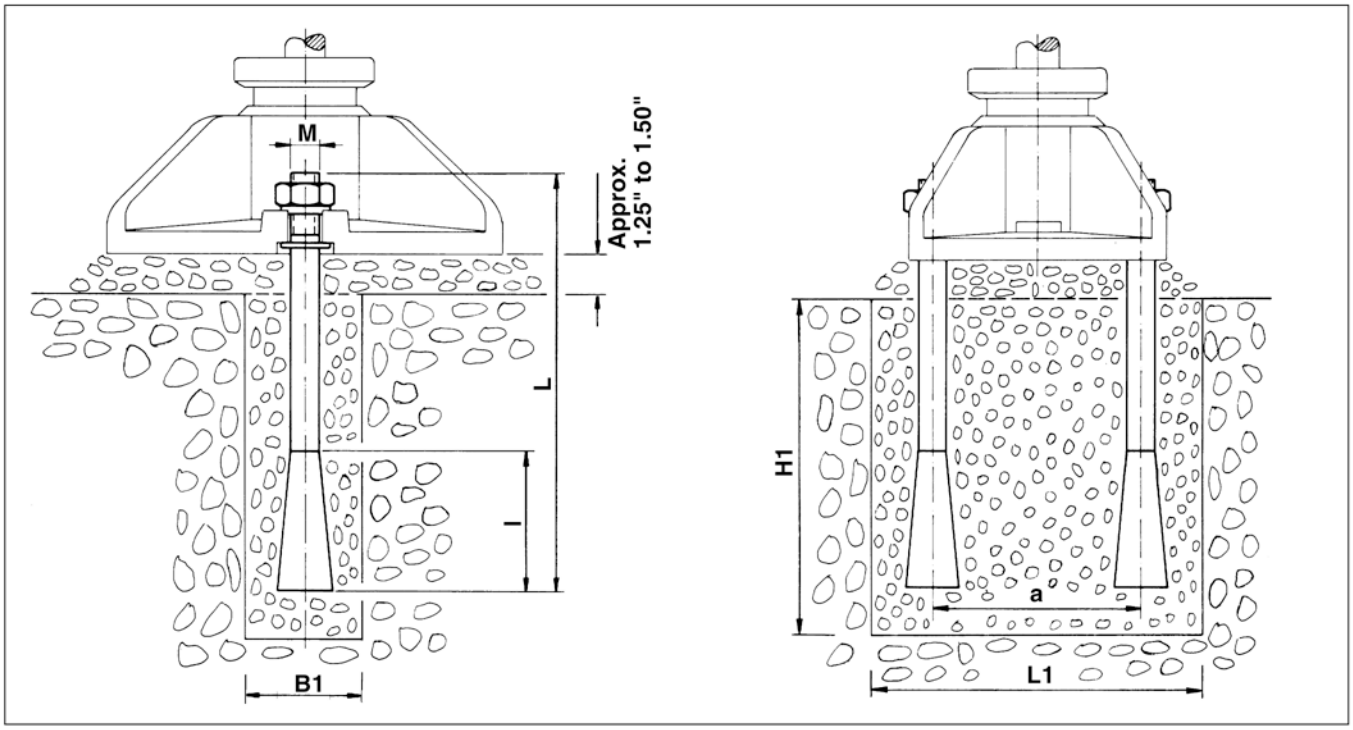

Option c

DIMENSIONS																					
SIZE S	M	L		I		a		B1		L1		H1		B2		L2		H2		Z1	
		in.	mm	in.	mm	in.	mm	in.	mm	in.	mm	in.	mm	in.	mm	in.	mm	in.	mm	in.	mm
I	M10	4.92	125	2.17	55	3.47	88	1.97	50	5.32	135	4.72	120	6.30	160	11.81	300	3.94	100	1.18	30
II	M12	5.91	150	2.76	70	3.94	100	2.36	60	6.30	160	5.51	140	7.87	200	12.99	330	4.33	110	1.38	35
III	M16	9.84	250	3.54	90	4.72	120	2.76	70	7.87	200	9.45	240	9.45	240	13.78	350	5.51	140	1.58	40
IV	M20	11.81	300	3.94	100	5.91	150	3.15	80	9.84	250	11.42	290	11.81	300	17.72	450	6.30	160	1.77	45
V	M24	13.78	350	5.32	135	7.09	180	3.94	100	13.78	350	13.78	350	12.60	320	19.69	500	7.48	190	1.97	50

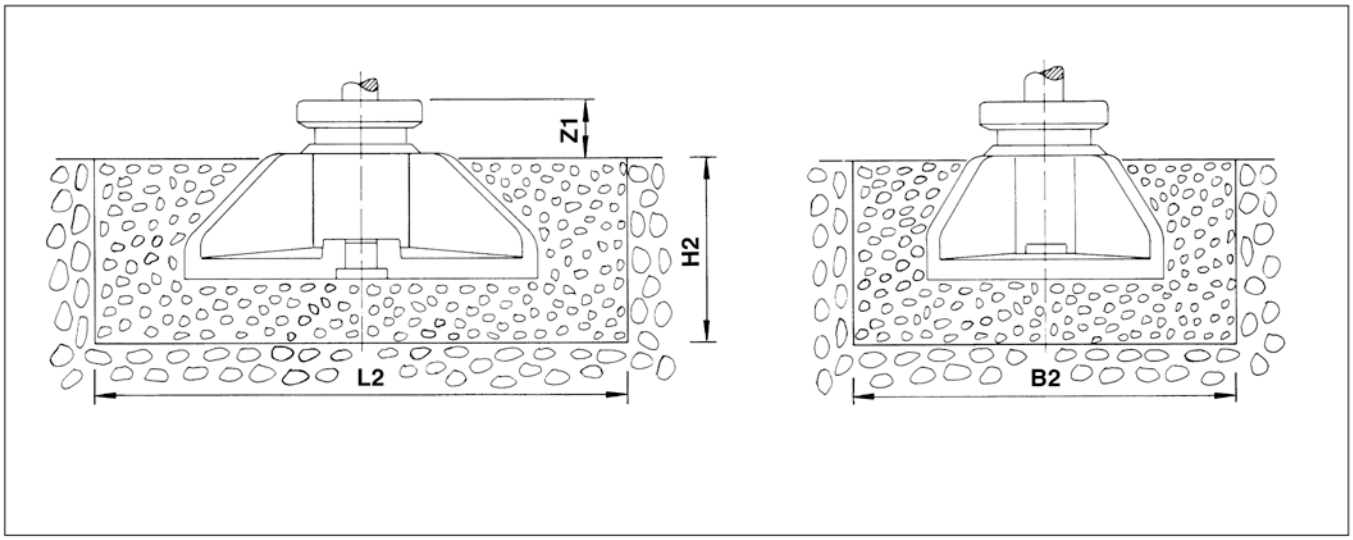

S FIXATOR® DETAILED OPTION SPECIFICATIONS
ANCHORED INSTALLATION

Option sew

DIMENSIONS							
S	M	f		SW		t	
		in.	mm	in.	mm	in.	mm
I	M16	2.56	65	.47	12	.47	12
II	M20	2.95	75	.59	15	.59	15
III	M24	3.54	90	.75	20	.75	20
IV	M30	4.33	110	.95	24	.95	24
V	M36	5.12	130	1.18	30	1.18	30

Option sew

DIMENSIONS						
S	dØ		L		l	
	in.	mm	in.	mm	in.	mm
I	.63	16	5.91	150	3.54	90
II	.79	20	7.87	200	3.94	100
III	.95	24	10.63	270	5.32	135
IV	1.18	30	12.60	320	5.91	150
V	1.42	36	13.72	348	7.09	180

Option sew

DIMENSIONS				
S	DØ		T	
	in.	mm	in.	mm
I	3.00	76	7.09	180
II	3.50	89	9.84	250
III	4.00	102	12.60	320
IV	5.00	127	14.96	380
V	6.00	152	20.47	520

Option sew

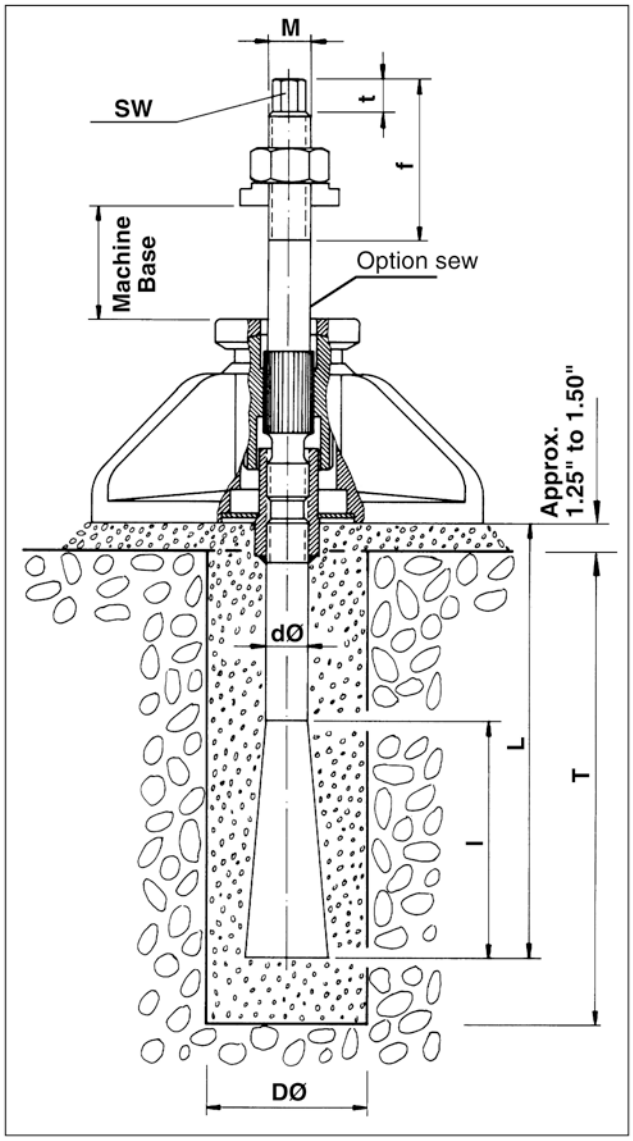

Option d

DIMENSIONS								
D	63		80		90		110	
	in.	mm	in.	mm	in.	mm	in.	mm
H	1.26	32	1.26	32	1.26	32	1.26	32
h	.43	11	.43	11	.43	11	.43	11
DØ	2.48	63	3.15	80	3.54	90	4.33	110

Option d

DIMENSIONS								
D	130		150		200		250	
	in.	mm	in.	mm	in.	mm	in.	mm
H	1.26	32	1.26	32	1.69	43	1.69	43
h	.43	11	.43	11	.45	11	.45	11
DØ	5.12	130	5.91	150	7.87	200	9.84	250

Option d

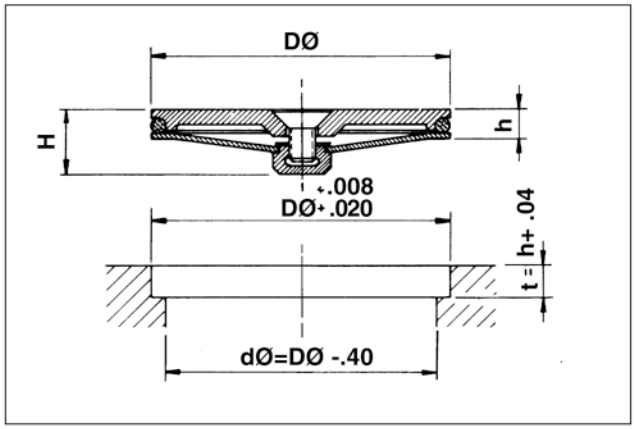

Clean the concrete foundation or floor thoroughly,

Clean the bottom surface of the machine or worktable.

The S Fixators must be adjusted to the same height. Standard adjustment at delivery: 1/8” (3mm) above the lowest point.

The S Fixators are protected against corrosion (therefore do not grease them).

When grouting in the anchor bolts, the specifications on Page 48 of this Fixator publication must be carefully complied with.

Attach the S Fixators to the worktable or machine feet and lower onto temporary auxiliary wedges.

Align the worktable or machine feet by using the auxiliary wedges, making certain that dimension between the worktable or machine feet and foundation is adhered to.

Fill the grout pocket with grout.

After proper grout cure the auxiliary wedges may be removed and the worktable or machine may be aligned.

Tighten the nuts on the se hold down bolts. The installation is now complete.

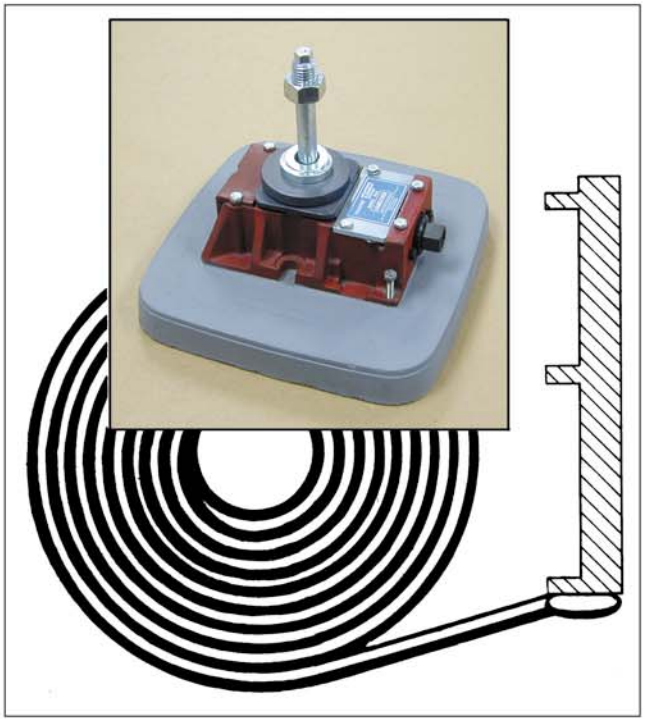

UNISORB® Grout Forms in pre-formed square shapes are available to satisfy grouting requirements in machinery installations. The plastic Grout Forms provide for uniformity in poured machinery bases and eliminate construction of Grout Forms on the job site.

Nine inch (229mm) square grout forms are available in heights up to 8 inches (203mm), and 11 inch (279mm) square grout forms are available in heights up to 10 inches (254mm). Twelve by fifteen inch (305 x 381mm) grout forms are available in heights up to 8 inches (203mm). UNISORB Grout Forms give excellent results when used with UNISORB V-1 cementitious grout and V-100 epoxy grout formulas.

UNISORB® BUTYL RUBBER SEALANT

High-tack butyl rubber sealant is supplied with the UNISORB® Grout Forms for application to the bottom flange of the form. The sealant adheres instantly to the Grout Forms and to clean, dry foundation surfaces. It gives a tight seal between the Grout Form and foundation surface preventing grout from leaking out during pouring. Sealant requires no cure time, unlike conventional caulking products, and allows for immediate pouring of grout as soon as forms are in position. The butyl sealant comes in easy to use rolls.

INSTALLATION INSTRUCTIONS

1. ***Apply butyl sealant to the bottom flange of the form (molded edge is the bottom). Apply sealant around the entire base of the form. Cut the sealant and butt the ends together or overlap and pinch together to make a complete seal. Application temperature range of the sealant is 20° F to 120° F (-7° C to 49° C).***
2. ***Leave the release paper on the sealant until the Grout Form is ready to be pressed into position. The Grout Form with sealant and release paper may be set in place while equipment is being installed.***
3. ***When ready to pour remove the release paper from the sealant. Press the form in place with medium pressure for five seconds so it is completely sealed to the foundation. The form is instantly sealed with no cure time required.***
4. ***Place grout following instructions provided with the grout.***
5. ***When the grout is set the forms may be removed if desired by cutting from top to bottom and unpeeling from the grout pad.***
6. ***Excess butyl sealant can be removed if desired with mineral spirits.***

PROPER GROUTING PROCEDURES

CEMENT-BASED GROUT

1. **PREPARATION**—All grout contact surfaces should be cleaned of all oil, grease, scale and other foreign matter. Chip away any unsound concrete leaving the surface level but rough. Grout placement and vent holes should be provided if necessary. After contaminants are removed, the foundation must be saturated with water for 24 hours prior to grouting. Before placing the grout all excess water should be removed, leaving the surfaces moist.

2. **FORMING**—The method of forming must provide for rapid, continuous and complete grout placement. The forms selected should not leak or buckle under the pressure of a flowable grout consistency. On the pouring side, the form must be slanted so the grout can be poured without entrapping air. On the opposite side, provide for at least a 2" (50mm) horizontal distance between the form and FIXATOR and at least 1/2" (12mm) head above the underside of the plate. Do not place form tight to the FIXATOR as air may be entrapped. Plates or equipment should be placed to provide 1 1/2" (38mm) minimum grout thickness.

3. **TEMPERATURE**—Manufacturer's instructions should be followed when using grout under low or high temperature conditions.

4. **PLACEMENT**—It is always a good practice to prevent entrapped air pockets from forming in the material while in the plastic state. This can be accomplished by pouring the grout from one side of the depression so that a full surface of grout is squeezed out of the other side, or by placing a slightly excess amount of grout on the surface so that the bearing weight of the grouted object can displace the grout in such a manner that full bearing is effected.

   Where grout must be flowed some distance, make the initial batch more flowable so as to act as a lubricant for the material to follow. Continuous and rapid mixing and placement will reduce the amount of working time required. Do not rework grout that has already been placed and that has thickened.

5. **CURING**—To prevent sagging of the material, causing loss of bearing area, forms should not be removed until the grout has hardened sufficiently. At this point the grout has enough body to make final finishing easy.

6. **MISCELLANEOUS**—Where there are larger unconfined areas, vibrating can be done with no risk of segregation.* In very small confined areas where grout tends to take the path of least resistance and the placement is visually good, the "funnel and hose" placement method can be used as another assurance against entrapped air or water.* In this method a funnel or hopper with a rubber or plastic hose (1" [25mm] opening or larger) attached to the funnel discharge opening does an excellent job. Simply place the end of the hose in the center of the anchor hole, withdrawing the hose slowly as the necessary quantiry of grout is placed. By starting in the center the air is forced to the outside.

   In larger, deeper applications, the grout may be poured in stages of 24-hour intervals.

   *Applicable only if UNISORB V-1 cementitious grout is used.

STANDARD V-100 EPOXY GROUT

1. **PREPARATION**—All grout contact surfaces should be cleaned of all oil, grease, scale and other foreign matter. Chip away any unsound concrete leaving the surface level but rough. Light sandblasting or acid etching may be sufficient but must be completely neutralized before grouting. Grout placement and vent holes should be provided if necessary. After contaminants are removed, the foundation must be dry and have no water in the anchor holes.

2. **FORMING**—The method of forming must provide for rapid, continuous and complete grout placement. The forms selected should not leak or buckle under the pressure of a flowable grout consistency. On the pouring side, the form must be slanted so the grout can be poured without entrapping air, and should be high enough to allow the grout to build at least a 2" (50mm) head. On the opposite side, provide for at least a 2" (50mm) horizontal distance between the form and FIXATOR and at least 1/2" (12mm) head above the underside of the plate. Do not place form tight to the FIXATOR as air may be entrapped. Plates or equipment should be placed to provide 1/2" to 3/4" (12mm to 19mm) grout thickness.

3. **TEMPERATURE**—Manufacturer's instructions should be followed when using grout under low or high temperature conditions.

4. **PLACEMENT**—It is always a good practice to prevent entrapped air pockets from forming in the material while in the plastic state. This can be accomplished by pouring the grout from one side of the depression so that a full surface of grout is squeezed out of the other side, or by placing a slightly excess amount of grout on the surface so that the bearing weight of the grouted object can displace the grout in such a manner that full bearing is effected.

5. **CURING**—To prevent sagging of the material, causing loss of bearing area, forms should not be removed until the grout has hardened sufficiently. At this point the grout has enough body to make final finishing easy.

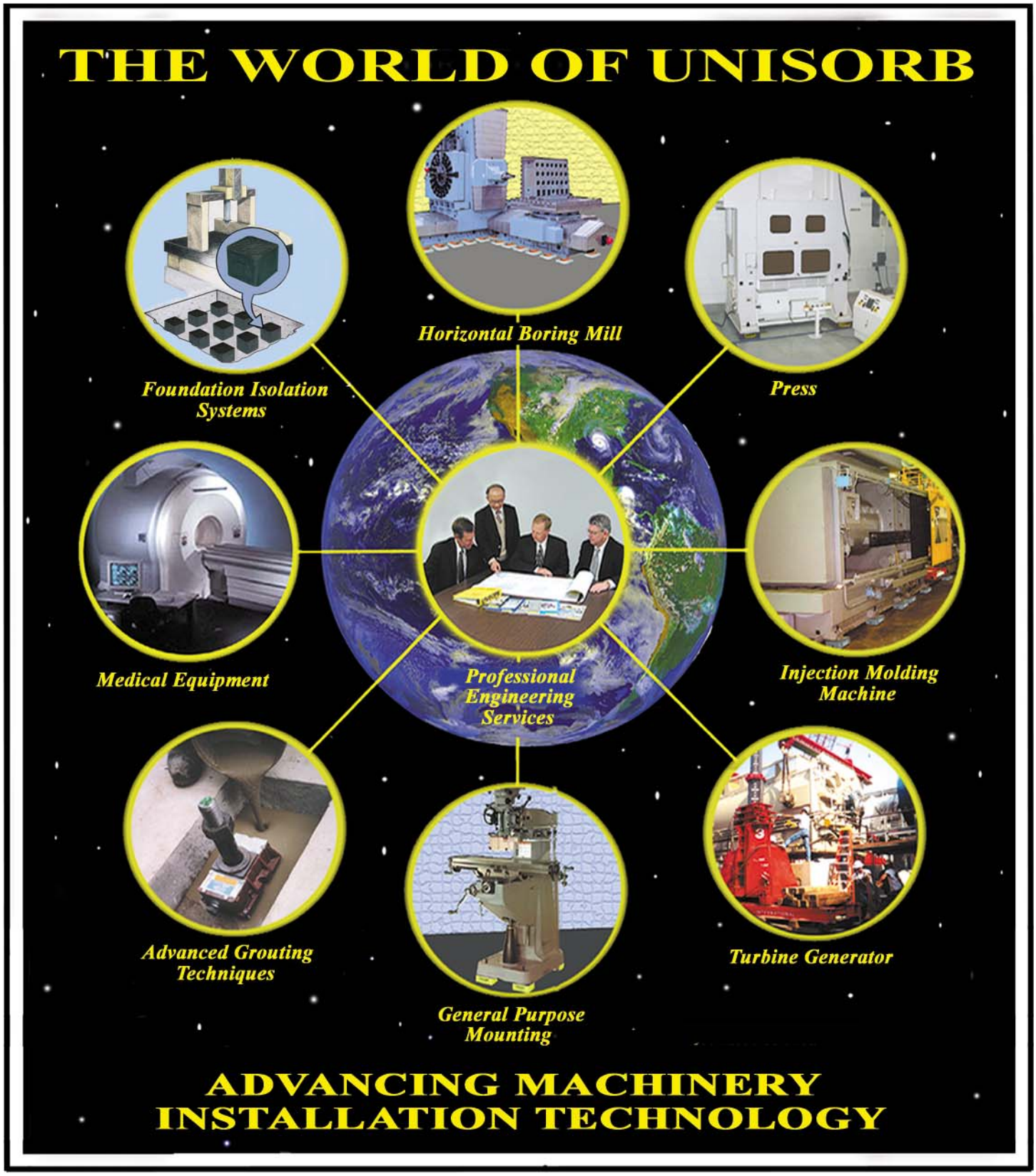

For design assistance Contact UNISORB engineering at 888-4-UNISORB (888-486-4767), FAX 517-764-5607, or e-mail us at unisorb@unisorb.com. Also, please visit our web site at www.unisorb.com.

MACHINE INSTALLATION EXPERTISE SINCE 1935

Since 1935, UNISORB has been serving the machinery installation needs of all segments of the manufacturing industry. As part of our commitment to provide the best installation products and services, UNISORB maintains the only industry staff of engineers devoted exclusively to the design and implementation of complete machinery installation systems. From concept to final installation, UNISORB ensures optimum performance of mounted equipment.

Depend on UNISORB's years of experience for:

- ***Machinery Mounts***
- ***Vibration Isolation Systems***
- ***Anchoring/Alignment Systems***
- ***Vibration Analysis Services***
- ***Professional Engineering Services***
- ***Isolated Foundation Design***
- ***Advanced Grouting Technologies***

UNISORB®

INSTALLATION TECHNOLOGIES

www.unisorb.com

BOX 1000, JACKSON, MI 49204-1000

888-4-UNISORB • 517-764-6060

ISO-9001 Certified